DORGEAN
Beijing Dorgean Electronic Technology Co.,Ltd

Instrument Expert
Original factory
packaging
www.dorgean.com

USER MANUAL

GAS-1050

Sulfur Dioxide Analyzer

Version 3.3

Met One Instruments
POWERED BY ACOEM

metone.com

Met One Instruments

POWERED BY ACOEM

Met One Instruments is now part of the Acoem Group. The Met One range of gas analyzers was originally developed by Acoem under the brand name Serinus®.

For the purposes of expediting the availability of Met One gas analyzers to Met One customers around the world; Met One Instruments have chosen to use the original Serinus® operating manual.

Although the name of the Met One instrument is different, the analyzer itself has remained unchanged and meets the strictest quality and performance requirements expected of Met One equipment. All the information presented in this manual is current, including analyzer specifications and operating principles.

Met One will update this manual to reflect the new branding convention in due course.

Table of Contents

Manufacturer's Statement 13
Notice 13
Safety Information 14
Important Safety Messages 15
Warranty 16
Service & Repairs 17
Product Compliance and Approvals 18
Manual Revision History 19

1. Introduction 21
1.1 Description 21
1.2 Specifications 21
1.2.1 Measurement 21
1.2.2 Precision/Accuracy 21
1.2.3 Calibration 22
1.2.4 Power Requirements 22
1.2.5 Operating Conditions 22
1.2.6 Communications 23
1.2.7 Physical Dimensions 23
1.2.8 Certifications 23
1.3 Nomenclature 24
1.4 Background/Theory 25
1.4.1 Measurement Theory 25
1.4.2 Kalman Filter Theory 26
1.5 Instrument Description 27
1.5.1 Calibration Valve Manifold 27
1.5.2 Sample Filter Holder 28
1.5.3 Dual Hydrocarbon Kicker 28
1.5.4 Zero Air Scrubber 29
1.5.5 DFU 29
1.5.6 Main Controller PCA 29
1.5.7 Measurement Cell 30
1.5.8 Lamp Driver PCA 34
1.5.9 Pneumatic Tubing 34
1.5.10 Rear Panel 35
1.5.11 Communications 36

2. Installation 39
2.1 Initial Check 39
2.2 Installation Notes 42
2.3 Instrument Set-up 43
2.3.1 Power Connections 43
2.3.2 Pneumatic Connections 44
2.3.3 Communications Connections 47
2.3.4 Instrument Set-up 48
2.4 U.S. EPA Equivalent Set-up 49

2.5 EN Type Approval Set-up 50
2.6 Transporting/Storage 51

3. Operation 53

3.1 Warm-Up 53
3.2 Measurement 53
3.3 General Operation Information 54
3.3.1 Keypad & Display 54
3.3.2 Home Screen 56
3.4 Menus & Screens 58
3.4.1 Quick Menu 59
3.4.2 Main Menu 60
3.4.3 Analyser State Menu 61
3.4.4 Status Menu 62
3.4.5 Temperature Menu 64
3.4.6 Pressure & Flow Menu 65
3.4.7 Voltage Menu 65
3.4.8 General Settings Menu 66
3.4.9 Measurement Settings Menu 67
3.4.10 Calibration Menu 69
3.4.11 Pressure Calibration Menu 71
3.4.12 Flow Calibration Menu (Optional) 72
3.4.13 Service Menu 73
3.4.14 Diagnostics Menu 74
3.4.15 Digital Pots Menu 75
3.4.16 Internal Pump Menu (Optional) 77
3.4.17 Valve Menu 78
3.4.18 Tests Menu 79
3.4.19 Digital Input Test Menu 80
3.4.20 Digital Output Test Menu 80
3.4.21 Calculation Factors Menu 81
3.4.22 Communications Menu 82
3.4.23 Data Logging Menu 83
3.4.24 Serial Communication Menu 84
3.4.25 Analog Input Menu 85
3.4.26 Analog Output Menu 86
3.4.27 Digital Input Menu 87
3.4.28 Digital Output Menu 89
3.4.29 Network Menu (Optional) 90
3.4.30 Bluetooth Menu 92
3.4.31 Trend Display Menu 92
3.4.32 Chart 93
3.4.33 Advanced Menu 95
3.4.34 Hardware Menu 96
3.4.35 Parameter Display Menu 97

4. Communications 99

4.1 RS232 Communication 99
4.2 USB Communication 100
4.3 TCP/IP Network Communication (Optional) 101
4.3.1 Reading Network Port Setup 102

4.3.2 Setting Network Port Setup 102
4.3.3 Port Forwarding on Remote Modem/Router Setup 103
4.3.4 Setup Airodis to Communicate with Serinus 103
4.4 Analog and Digital Communication 104
4.4.1 Analog Outputs 104
4.4.2 Analog Inputs 105
4.4.3 Digital Status Inputs 105
4.4.4 Digital Status Outputs 105
4.5 Logging Data 107
4.5.1 Configure Instrument Internal Logging 107
4.6 Using Airodis Software to Download Data 107
4.6.1 Connecting the Instrument to a PC 107
4.6.2 Installing Airodis 110
4.6.3 Configuring Airodis 111
4.7 Serinus Remote App/Bluetooth 116
4.7.1 Installation 116
4.7.2 Connecting to the Instrument 117
4.7.3 Instrument Control 118
4.7.4 Real-Time Plot 119
4.7.5 Download 120
4.7.6 Get Parameters 121
4.7.7 Preferences 122
5. Calibration 125
5.1 Overview 125
5.2 Pressure Calibration 127
5.2.1 Full Pressure Calibration (Two Point Calibration) 127
5.2.2 Pressure Calibration (Ambient Only) 129
5.2.3 Pressure Calibration (Internal Pump Option Only) 130
5.3 Manual Background 131
5.4 Zero Calibration 132
5.4.1 Calibration Port 132
5.4.2 Sample Port 133
5.4.3 Background Air Port 133
5.5 Span Calibration 134
5.5.1 Calibration Port 134
5.5.2 Sample Port 135
5.5.3 Manual Instrument Gain and Offset Adjustments 136
5.6 Precision Check 136
5.7 Multipoint Precision Check 137
5.8 Flow Calibration (Internal Pump Option Only) 138
5.9 High Pressure Zero/Span Valve (Option) 139
5.9.1 Single Pressurised Calibration Option 140
5.9.2 Dual Pressurised Calibration Option 141
6. Service 145
6.1 Additional Safety Requirements for Service Personnel 145
6.2 Maintenance Tools 145
6.3 Maintenance Schedule 146

6.4 Maintenance Procedures 148
6.4.1 Particulate Filter Replacement 148
6.4.2 Clean Chassis Fan Filter 151
6.4.3 DFU Replacement 151
6.4.4 Leak Check 152
6.4.5 Replacing the PMT Desiccant Packs 156
6.4.6 Replace Zero Air Scrubber 157
6.4.7 Orifice Replacement 159
6.4.8 UV Lamp Replacement 160
6.4.9 Clean Pneumatics 163
6.4.10 Pressure Sensor Check 163
6.5 Bootloader 164
6.5.1 Display Help Screen 164
6.5.2 Communications Port Test 165
6.5.3 Updating Firmware 165
6.5.4 Erase All Settings 165
6.5.5 Start Analyser 165

7. Troubleshooting 167
7.1 Flow Fault 170
7.2 Noisy/Unstable Readings 171
7.3 Electronic Zero Adjust 172
7.4 Reaction Cell Temperature Failure 173
7.5 USB Memory Stick Failure 174
7.6 Technical Support Files 175

8. Optional Extras 177
8.1 Dual Sample Filter (PN: E020100) 177
8.2 Test Lamp (PN: E020103) 178
8.3 Network Port (PN: E020101) 178
8.3.1 Hardware Setup 179
8.4 Rack Mount Kit (PN: E020116) 179
8.5 Internal Pump (PN: E020106) 184
8.5.1 Hardware Setup 184
8.5.2 Internal Pump Pneumatic 184
8.5.3 Internal Pump Additional Components 184
8.5.4 Internal Pump Removed Components 185
8.5.5 Pressure Calibration Internal Pump Option 185
8.5.6 Flow Calibration 185
8.5.7 Leak Check Internal Pump Option 186
8.5.8 Pump Control 186
8.6 Metric Fittings Kit (PN: E020122) 186
8.7 Internal Zero and Span (PN: E020135) 186
8.7.1 IZS Specifications 187
8.7.2 IZS Setup 189
8.7.3 IZS Transporting/Storage 190
8.7.4 IZS Calibration 191
8.7.5 IZS Service and Maintenance 192
8.8 High Pressure Zero/Span Valves 195

8.9 Trace Level Instrument (PN: E020126) 195
8.9.1 Trace Specifications 195
8.9.2 Trace Setup 196
8.9.3 Trace Operation 196
8.9.4 Trace Default Values 197
8.9.5 Trace Calibration Guidelines 197
8.9.6 Trace Service and Maintenance 198

9. Parts List and Schematics 199

9.1 Serinus Accessories Kit 199
9.2 Maintenance Kit 199
9.3 Consumables 200
9.4 Instrument Parts List 201
9.4.1 Optional Extras Spare Part List 206
9.5 Plumbing Schematic - (PN: D020003) 208
9.6 Internal Pump Plumbing Schematic - (PN: D020006) 209
9.7 IZS Plumbing Schematic - (PN: D020053) 210
9.8 Block Wiring Schematic - (PN: D020105) 212
9.9 IZS Block Wiring Schematic - (PN: D020123) 213
9.10 Optical Bench Assembly - (PN: H012130) 214
9.11 Reaction Cell Assembly - (PN: H012100) 215
9.12 Lamp Holder Assembly - (PN: H012120) 216
9.13 Dump Assembly - (PN: H012110) 217
9.14 Permeation Oven Assembly - (PN: H012170) 218
9.15 Sample Filter Holder Assembly - (PN: H010160) 219
9.16 Calibration Valve Manifold Assembly - (PN: H010013-01) 220
9.17 IZS Calibration Valve Manifold Assembly - (PN: H010056) 221
9.18 Valve Assembly - (PN: H010042) 222
9.19 High Pressure Valve Exploded View - (PN: H050043) 223

List of Figures

Figure 1 – Simple Pneumatic Diagram 25
Figure 2 – Optical Measurement Theory 26
Figure 3 – Major Components of Serinus 50 27
Figure 4 – Calibration Valve Manifold 27
Figure 5 – Sample Filter Holder 28
Figure 6 – Dual Hydrocarbon Kicker 28
Figure 7 – Zero Air Scrubber 29
Figure 8 – DFU 29
Figure 9 – Measurement Cell 30
Figure 10 – PMT Assembly - 1 30
Figure 11 – PMT Assembly - 2 30
Figure 12 – Reaction Cell Assembly - 1 31
Figure 13 – Reaction Cell Assembly - 2 32
Figure 14 – Reaction Cell Assembly - 3 32
Figure 15 – Orifice 33

Figure 16 – Lamp Driver PCA Type Jumper Setting (REV D) 34
Figure 17 – Ecotech Tubing 34
Figure 18 – Rear Panel 35
Figure 19 – Power ON/OFF Switch 35
Figure 20 – Communication Connections 36
Figure 21 – Received Item 40
Figure 22 – Opening the Instrument - 1 41
Figure 23 – Opening the Instrument - 2 41
Figure 24 – Opening the Instrument - 3 41
Figure 25 – Opening the Instrument - 4 42
Figure 26 – Instrument Rear Panel 43
Figure 27 – Connect Power Cord 44
Figure 28 – Turn ON Power Switch 44
Figure 29 – Dust Plugs 45
Figure 30 – Remove Nut 45
Figure 31 – Ferrules Correct Orientation 45
Figure 32 – Replace Nut Loosely 46
Figure 33 – Insert Tube 46
Figure 34 – Tighten Nut 46
Figure 35 – Installation of USB Memory Stick 48
Figure 36 – Switching the Battery ON/OFF 48
Figure 37 – Dust Plugs 51
Figure 38 – Packing Instruction 52
Figure 39 – Front Panel 54
Figure 40 – Home Screen 56
Figure 41 – Quick Menu Screen 59
Figure 42 – Main Menu Screen 60
Figure 43 – Analyser State Menu Screen 61
Figure 44 – Status Menu Screen 62
Figure 45 – Temperature Menu Screen 64
Figure 46 – Pressure & Flow Menu Screen 65
Figure 47 – Voltage Menu Screen 65
Figure 48 – General Settings Menu Screen 66
Figure 49 – Measurement Settings Menu Screen 67
Figure 50 – Calibration Menu Screen 69
Figure 51 – Pressure Calibration Menu Screen 71
Figure 52 – Flow Calibration Menu Screen 72
Figure 53 – Service Menu Screen 73
Figure 54 – Diagnostics Menu Screen 74
Figure 55 – Digital Pots Menu Screen 75
Figure 56 – Internal Pump Menu Screen 77
Figure 57 – Valve Menu Screen 78
Figure 58 – Tests Menu Screen 79
Figure 59 – Digital Input Test Menu Screen 80
Figure 60 – Digital Output Test Menu Screen 80
Figure 61 – Calculation Factors Menu Screen 81
Figure 62 – Communications Menu Screen 82
Figure 63 – Data Logging Menu Screen 83
Figure 64 – Serial Communication Menu Screen 84
Figure 65 – Analog Input Menu Screen 85
Figure 66 – Analog Output Menu Screen 86
Figure 67 – Digital Input Menu Screen 87

Figure 68 – Digital Output Menu Screen 89
Figure 69 – Network Menu Screen 90
Figure 70 – Bluetooth Menu Screen 92
Figure 71 – Trend Display Menu Screen 92
Figure 72 – Chart Screen 93
Figure 73 – Advanced Menu Screen 95
Figure 74 – Hardware Menu Screen 96
Figure 75 – Parameter Display Menu Screen 97
Figure 76 – Communication Ports 99
Figure 77 – Multidrop RS232 Cable Example 100
Figure 78 – Example of Typical Network Setups 101
Figure 80 – Example of Network Menu Setup 102
Figure 81 – Port Forwarding Example 103
Figure 82 – LAN Network Set-Up (Airodis) 103
Figure 83 – WAN Network Set-Up (Airodis) 104
Figure 84 – Rear Panel PCA (Default Jumpers Highlighted) 106
Figure 85 – Analog & Digital I/O Individual Pin Descriptions 106
Figure 86 – Installing Driver Software (Device Manager) 108
Figure 87 – Update Driver Popup 108
Figure 88 – Update Driver Popup (Directory Location) 109
Figure 89 – Installing Driver Confirmation Prompt 109
Figure 90 – Successful Driver Installation 110
Figure 91 – Airodis Workspace Manager 111
Figure 92 – Adding a New Station 111
Figure 93 – New Station Connection 112
Figure 94 – Station Configuration (Channel List) 113
Figure 95 – Error Status Notification 113
Figure 96 – Downloading Data 114
Figure 97 – Download Data Status 114
Figure 98 – Data Visibility 115
Figure 99 – Exporting Data 115
Figure 100 – Data Download Complete 116
Figure 101 – Downloading the App from Google Play Store 117
Figure 102 – Bluetooth Pairing Request 117
Figure 103 – Showing or Hiding the NumPad 118
Figure 104 – Switching Analysers 119
Figure 105 – Real-Time Plot 120
Figure 106 – Plot of Downloaded Data 121
Figure 107 – Directory Settings 122
Figure 108 – Logs Format 122
Figure 109 – Colour Theme Settings 123
Figure 110 – Example of a Calibration System 125
Figure 111 – Full Pressure Calibration Set-up 128
Figure 112 – Full Pressure Calibration Set-up (Ambient) 128
Figure 113 – Ambient Pressure Calibration Set-up 129
Figure 114 – Pressure Calibration (Internal Pump Option Only) Set-up 130
Figure 115 – DFU 131
Figure 116 – Zero Calibration Set-up - 1 132
Figure 117 – Zero Calibration Set-up - 2 133
Figure 118 – Span Calibration Set-up - 1 134
Figure 119 – Span Calibration Set-up - 2 135
Figure 120 – Excel Graph of Multipoint Calibration 138

Figure 121 – Single High Pressure Calibration Option 140
Figure 122 – Dual High Pressure Calibration Option 141
Figure 123 – Minifit Extraction Tool - (PN: T030001) 145
Figure 124 – Orifice/Sintered Filter Removal Tool - (PN: H010046) 146
Figure 125 – Leak Test Jig - (PN: H050069) 146
Figure 126 – Air Monitoring Test Equipment Kit (AMTEK) - Customisable 146
Figure 127 – Remove Tubing 148
Figure 128 – Remove Retaining Ring 148
Figure 129 – Remove Filter Sealing Cap 149
Figure 130 – Particulate Filter 149
Figure 131 – Avoid to Touching Particulate Filter Paper 150
Figure 132 – Elbow Fitting Direction 150
Figure 133 – Reconnect the Compression Nut and Tubing 150
Figure 134 – Remove Filter Casing and Filter 151
Figure 135 – DFU 152
Figure 136 – Leak Test Jig on Exhaust Port 152
Figure 137 – Connect Vacuum Source 153
Figure 138 – Blocker BGnd Air Port 153
Figure 139 – Bypass DFU 155
Figure 140 – Remove Desiccant Access Cap 156
Figure 141 – Remove the Tubing 157
Figure 142 – Pull-out the DFU 158
Figure 143 – Zero Scrubber Removal 158
Figure 144 – Reaction Cell Tee Fitting 159
Figure 145 – Orifice Location 160
Figure 146 – Collets of the UV Lamp 161
Figure 147 – Connect Oscilloscope 162
Figure 148 – Collets of the UV Lamp 162
Figure 149 – Test Point Location 164
Figure 150 – Typical Test Point Reading of Cell Pressure Sensor 164
Figure 151 – Flow Fault Diagnostic Procedure 170
Figure 152 – Noisy or Unstable Zero or Span Results 171
Figure 153 – Troubleshooting, Electronic Zero Adjust 172
Figure 154 – Troubleshooting, Reaction Cell Temperature Failure 173
Figure 155 – USB Memory Stick Failure 174
Figure 156 – USB Memory Stick File Structure 176
Figure 157 – Dual Filter Option Installed 177
Figure 158 – Test Lamp 178
Figure 159 – Separate Rack Slides 180
Figure 160 – Assemble Inner Slide on Chassis 180
Figure 161 – Rack Mount Ears Fitted to Instrument 181
Figure 162 – Attach Rack Mount Adaptors to Outer Slides 181
Figure 163 – Test Fit the Rack Slide Assembly into your Rack 182
Figure 164 – Attach Slides to Front of Rack 182
Figure 165 – Slide Clips 183
Figure 166 – Internal Pump Option 184
Figure 167 – IZS Specific Internal Components Diagram 187
Figure 168 – Typical Permeation Tube and Chamber Dimensions (Units in mm) 188
Figure 169 – Permeation Tube Removal 190

List of Tables

Table 1 – Internationally Recognised Symbols 14
Table 2 – Manual Revision History 19
Table 3 – List of Items Received 39
Table 4 – Measurement Times 53
Table 5 – Digital Output States 89
Table 6 – Setting up a New Station via Airodis 112
Table 7 – Maintenance Schedule 147
Table 8 – Zero Air Scrubber Replacement Frequency 158
Table 9 – Common Errors and Troubleshooting 167
Table 10 – Dual Sample Filter Parts Added 177
Table 11 – Test Lamp Parts Added 178
Table 12 – Test Lamp Parts Removed 178
Table 13 – Network Port Parts Added 178
Table 14 – Network Port Parts Removed 179
Table 15 – Rack Mount Kit Parts Added 179
Table 16 – Internal Pump Parts Added 184
Table 17 – Internal Pump Parts Removed 185
Table 18 – IZS Parts Added 187
Table 19 – IZS Parts Removed 187
Table 20 – IZS Annual Maintenance Kit - (PN: E020212) 192
Table 21 – High Pressure Zero/Span Valves Parts Added 195
Table 22 – Trace Parts Added 195
Table 23 – Trace Parts Removed 195
Table 24 – Trace Parameter Value Changes 197
Table 25 – Maintenance Schedule 198
Table 26 – Serinus Accessories Kit (PN: H010136) 199
Table 27 – Serinus 50 Maintenance Kit - (PN: E020204) 199
Table 28 – Serinus 50 Consumables 200
Table 29 – Spare Parts List (Main Components) 201
Table 30 – Spare Parts List (Cables) 202
Table 31 – Spare Parts List (O-rings) 202
Table 32 – Spare Parts List (Fittings) 203
Table 33 – Spare Parts List (Miscellaneous) 204
Table 34 – Spare Parts List (Shipping) 205
Table 35 – Spare Part List (Test Lamp) 206
Table 36 – Spare Part List (Internal Pump) 206
Table 37 – Spare Part List (Metric Fittings Kit) 206
Table 38 – Spare Part List (IZS) 207
Table 39 – Spare Part List (High Pressure Zero/Span Valves) 207
Table 40 – Spare Part List (Trace Level Instrument) 207
Table 41 – Packet Format 225
Table 42 – Example: Primary Gas Request 225
Table 43 – Example: Primary Gas Response 226
Table 44 – Example: Primary Gas Response (Continued) 226
Table 45 – List of Errors 226
Table 46 – Example: Get IEEE Response data 227
Table 47 – Advanced Protocol Parameter List 228
Table 48 – Bayern-Hessen Data 241
Table 49 – Block Check Operation 242
Table 50 – Status Bit Map 243

Table 51 – Failure Bit Map (Positive Logic) 243
Table 52 – Modbus Error Codes 247

List of Appendices

Appendix A. Advanced Protocol 225
A.1 Command Format 225
A.2 Commands 226
A.3 List of Parameters 228
Appendix B. EC9800 Protocol 239
B.1 Command Format 239
B.2 Commands 239
Appendix C. Bayern-Hessen Protocol 241
C.1 Command Format 241
C.2 Commands 242
Appendix D. ModBus Protocol 245
D.1 Command Format 245
D.2 Commands 246

Manufacturer's Statement

Thank you for selecting the Acoem Australasia Serinus® 50 Sulfur Dioxide Analyser.

The Serinus series is the next generation of Acoem Australasia designed and manufactured gas analysers. The Serinus 50 will perform sulfur dioxide (SO_2) measurements over a range of 0 - 20 ppm with a lower detectable limit of 0.3 ppb.

This User Manual provides a complete product description including operating instructions, calibration and maintenance requirements for the Serinus® 50 Sulfur Dioxide Analyser.

Reference should also be made to the relevant local standards which should be used in conjunction with this manual. Some of these standards are listed in this manual.

If, after reading this manual you have any questions or you are still unsure or unclear on any part of the Serinus® 50, please do not hesitate to contact Acoem Australasia or your local Acoem Australasia distributor.



Please help the environment and recycle the pages of this manual when you have finished using it.

Notice

The information contained in this manual is subject to change without notice. Acoem Australasia reserves the right to make changes to equipment construction, design, specifications and/or procedures without notification.

Ecotech Pty. Ltd. Has changed its trading name to Acoem Australasia.

Copyright © 2022. All rights reserved. Reproduction of this manual, in any form, is prohibited without the written consent of Acoem Australasia.

Safety Information

Read all the safety information in this section prior to using the equipment. To reduce the risk of personal injury caused by potential hazards, follow all safety notices and warnings in this documentation.

The following internationally recognised symbols are used on Acoem Australasia equipment:

Table 1 – Internationally Recognised Symbols

	Protective conductor terminal	IEC 60417-5019
	Alternating current	IEC 60417-5032
	Caution, hot surface	IEC 60417-5041
	Caution, risk of danger to user and/or equipment Refer to any accompanying documents	ISO 7000-0434
	Caution, risk of electric shock	ISO 3864-5036

These symbols will also be found throughout this manual to indicate relevant safety messages.

Note: Notes are used throughout this manual to indicate additional information regarding a particular part or process.

If the equipment is used for purposes not specified by Acoem Australasia, the protection provided by this equipment may be impaired.

Important Safety Messages

	**Disconnect Power Prior to Service** Hazardous voltages exist within the instrument. Do not remove or modify any of the internal components or electrical connections whilst the mains power is ON. Always unplug the equipment prior to removing or replacing any components.
	**Replacing Parts** Replacement of any part should only be carried out by qualified personnel, using only parts specified by Acoem Australasia, as these parts meet stringent Acoem Australasia quality.
	**Mains Supply Cord** Do not replace the detachable mains supply cord with an inadequately rated cord. Any mains supply cord that is used with the instrument must comply with the safety requirements (250 V/10 A minimum requirement). A mains power cord with a protective earth conductor must be used. Ensure that the mains supply cord is maintained in a safe working condition.
	**Do Not Expose Equipment to Flammable Gases** This equipment is not intended for use in explosive environments, or conditions where flammable gases are present. The user should not expose the equipment to these conditions. Do not introduce any flammable gases into the instrument, otherwise serious accidents such as explosion or fire may result.
	**Electromagnetic Compliance** The instrument lid should be closed when in normal operation, to comply with EMC regulations.
	**Means of Lifting/Carrying Instrument** This instrument is a heavy and bulky object. Two persons should lift/carry the object, otherwise use proper lifting equipment. Proper lifting techniques should be used when moving the instrument.
	**Internal Components** Do not insert a rod or finger into the cooling fans, otherwise injury may result. Do not energise the instrument until all conductive cleaning liquids, used on internal components, are dried up.

Warranty

This product has been manufactured in an ISO 9001 facility with care and attention to quality.

The product is subject to a 24-month warranty on parts and labour from the date of shipment. The warranty period commences when the product is shipped from the factory. Lamps, filters and other consumable items are not covered by this warranty.

Each instrument is subjected to a vigorous testing procedure prior to despatch and will be accompanied with a parameter list and a multipoint precision check, thereby enabling the instrument to be installed and ready for use without any further testing.

Service & Repairs

Our qualified and experienced technicians are available to provide fast and friendly service between the hours of 8:30 am - 5:00 pm AEST Monday to Friday. Please contact either your local distributor or Acoem Australasia regarding any questions you have about your instrument.

Service Guidelines

This manual is designed to provide the necessary information for the setup, operation, testing, maintenance and troubleshooting of your instrument.

Should you still require support after consulting the documentation, we encourage you to contact your local distributor for support.

To contact Acoem Australasia directly, please e-mail our Technical Support Specialist group at support@ecotech.com or to speak with someone directly:

Please dial 1300 364 946 if calling from within Australia.

Please dial +61 3 9730 7800 if calling from outside of Australia.

Please contact Acoem Australasia and obtain a Return Material Authorisation (RMA) number before sending any equipment back to the factory. This allows us to track and schedule service work and to expedite customer service. Please include this RMA number when you return the equipment, preferably both inside and outside the shipping packaging. This will ensure you receive prompt service.

When shipping instrumentation, please also include the following information:

- Name and phone number
- Company name
- Shipping address
- Quantity of items being returned
- Model number/s or a description of each item
- Serial number/s of each item (if applicable)
- A description of the problem and any fault-finding completed
- Original sales order or invoice number related to the equipment

Shipping Address:

Attention Service Department

Acoem Australasia

1492 Ferntree Gully Road,

Knoxfield, VIC Australia 3180

Product Compliance and Approvals

The Serinus® 50 Sulfur Dioxide Analyser, as manufactured by Acoem Australasia, complies with the essential requirements of the directives listed below (including CE compliance). The respective standards have been applied:

CE

Low Voltage Directive (LVD) Directive 2014/35/EU

EN 61010-1:2010	Safety requirements for electrical equipment, for measurement, control and laboratory use - General requirements

Electromagnetic Compatibility (EMC) Directive 2014/30/EU

EN 61326-1:2013	Electrical equipment for measurement, control and laboratory use - EMC requirements - General requirements

Radio Equipment Directive (RED) 2014/53/EU

EN 300 328 V2.1.1	Wideband transmission systems - Data transmission equipment operating in the 2.4 GHz ISM band and using wide band modulation techniques

Regulatory Compliance Mark (RCM) - Australia

AS/NZS 4268:2017	Radio equipment and systems - Short range devices - Limits and methods of measurement
ARPANSA Radiation Protection Standard	Maximum Exposure Levels to Radiofrequency Fields - 3 kHz to 300 GHz - Radiation Protection Series Publication No. 3: 2002

This analyser is also certified to a number of measurement standards - refer to Section 1.2.8.

Manual Revision History

Manual PN: M010029

Current revision: 3.3

Date released: 9 March 2022

Description: User Manual for the Serinus® 50 Sulfur Dioxide Analyser

This manual is the full user manual for the Serinus® 50 Sulfur Dioxide Analyser. This manual contains all relevant information on theory, specifications, installation, operation, maintenance and calibration. Any information that cannot be found within this manual can be obtained by contacting Acoem Australasia.

This manual uses cross reference links extensively throughout this manual. The hot keys below will greatly reduce the amount of time scrolling between references:

- You can access the links by pressing the following:
  - > CTRL + LEFT MOUSE CLICK: Move to the link location

- You can switch between links by pressing the following:
  - > ALT + LEFT ARROW KEY: Returns you to the previous Link
  - > ALT + RIGHT ARROW KEY: Swaps back

Table 2 – Manual Revision History

Edition	Date	Summary
1.0	October 2008	Initial release
1.1	February 2009	Communication update
1.2	February 2009	New maintenance procedures and small corrections
1.3	November 2009	Updated flow from 0.5 - 0.7 New internal pump added Serinus downloader added Advanced communication protocol added
1.4	September 2010	CE conformity added Parts list updated Pressurised zero/span valve added Updates to rack mount option Updates to Serinus downloader Update to 25 pin I/O Update to network communications
2.0	July 2012	New chassis Updated menu system

Edition	Date	Summary
		Added Bluetooth menu Serinus remote Android app Rack mount procedure updated Analog Output Calibration
2.1	March 2013	Formatting updates
2.2	October 2013	Formatting updates
2.2	November 2013	Addition of Airodis installation steps
3.0	April 2014	Auto-Ranging Power Supply Added Main Controller and Rear Panel PCAs changed.
3.1	April 2016	IZS and Trace options added
3.2	June 2018	Safety Information updated Product Compliance & Approvals updated
3.3	March 2022	Manual update to firmware 4.12.0 Rev. Q board. A number of changes to descriptions, procedures and menu items. Standardization of naming convection applied.

1. Introduction

1.1 Description

The Serinus 50 Sulfur Dioxide Analyser (SO_2) uses UV fluorescent radiation technology to detect sulfur dioxide in the range of 0 - 20 ppm.

The U.S. EPA has designated the Serinus 50 Sulfur Dioxide Analyser as an equivalent method and TÜV has designated it as an EN approved instrument.

This section will describe the specifications of the instrument as well as the main components and techniques used to obtain stable gas concentration readings.

1.2 Specifications

1.2.1 Measurement

Range

0 - 20 ppm (autoranging)

U.S. EPA designated range: 0 - 0.5 ppm

TÜV EN certification range: 0 - 400 ppb

Lower Detectable Limit

< 0.3 ppb 0.2% of concentration whichever is greater, with Kalman filter active

1.2.2 Precision/Accuracy

Precision

0.5 ppb or 0.5% of reading, whichever is greater

Linearity

± 1% of full scale (from best straight-line fit)

Noise at Zero

< 0.15 ppb

Response Time

60 seconds to 95%

Sample Flow Rate

0.750 slpm

1.2.3 Calibration

Zero Drift

Temperature dependant:	1.0 ppb per °C
24 hours:	< 0.5 ppb
30 days:	< 0.5 ppb

Span Drift

Temperature dependant:	0.1% per °C
24 hours:	< 0.5% of reading or < 0.5 ppb whichever is greater
30 days:	< 0.5% of reading

1.2.4 Power Requirements

Operating Voltage

100 - 240 VAC (± 10%)

50 - 60 Hz (autoranging)

Overvoltage Category II

Power Consumption

250 VA max (typical at start up)

180 VA after warm up

1.2.5 Operating Conditions

Ambient Temperature:	0 - 40 °C (32 - 104 °F)
Relative Humidity:	10 - 80% (non-condensing)
Pollution Degree:	2
Sample Pressure Dependence:	5% change in pressure produces less than a 1% change in reading
Maximum altitude[1]:	2000 m above sea level

[1] For higher altitude contact Acoem Australasia for support/assistance.

1.2.6 Communications

Analog Output

Three menu selectable current or voltage analog outputs:

- Current output of 0 - 20 mA, 2 - 20 mA or 4 - 20 mA.
- Voltage output of 0 - 5 V, with menu selectable zero offset of 0 V, 0.25 V or 0.5 V.
- Voltage output of 0 - 10 V (configured using jumpers (JP3) on rear panel PCA).
- Range: User scalable min and max range for analog output to suit application.

Analog Input

- Three analog voltage inputs (0 - 5 VDC) CAT I rated.

Digital Output

- RS232 port #1: Normal digital communication.
- RS232 port #2: Multidrop port used for multiple instrument connections on a single RS232.
- USB port connection on the rear panel.
- USB memory stick (front panel) for data logging, event logging, parameter and configuration storage.
- TCP/IP (optional)
- 25 pin connector with discrete status and user control.
    - Eight Digital Outputs, open collector max 400 mA each @ 12 VDC (max total output 2 A).
    - Eight Digital Inputs, 0 - 5 VDC, CAT I rated.

1.2.7 Physical Dimensions

Case Dimensions

Rack Length (front to rear):	622 mm (24.5”)
Total Length (with latch release):	662 mm (26.1”)
Chassis Width:	418 mm (16.5”)
Front Panel Width:	429 mm (16.9”)
Chassis Height:	163 mm/Uses 4 RU (6.4”)
Front Panel Height:	185 mm (7.3”)
Weight:	21.4 kg

1.2.8 Certifications

- US EPA approval (RFNA-0809-186)
- EN approval TÜV (0000040205-02)

- EN approval MCERTS (MC100167/07)
- Australian Standard (AS 3580.5.1-2011)
- Russian approval (56263-14)
- French approval LSCQA
- Ukraine approval (12/3/B/24/295-17)
- Chinese Pattern Approval (JJF1361-2012)
- Korean approval NIER (AACMS-2017-04)

1.3 Nomenclature

SO2	This is the abbreviation for sulfur dioxide.
Span	A gas sample of known composition and concentration used to calibrate/check the upper range of the instrument (sulfur dioxide).
Zero	Zero calibration uses zero air (SO_2 scrubbed ambient air) to calibrate/check the lower range of the instrument.
Background	This is the reading of the sample without sulfur dioxide present in the measurement cell.
Multipoint Precision Check	A procedure to verify the linearity of the response of the instrument.
Calibration	The process of adjusting the instrument to ensure that it is measuring the correct concentration.
Zero Drift	The change in instrument response to zero air over a period of continuous unadjusted operation.
Zero Air	Is purified air in which the concentration of SO_2 is < 0.5 ppb with water vapour of less than 10% RH. Sufficient purified air can be obtained by passing dry ambient air through an activated charcoal filter and a particulate filter.
External Span Source	Span gas that is delivered via an external accredited cylinder (e.g. NATA/NIST).
Sample Air	Sample air is defined as the sample before it has entered the reaction cell, as distinguished from the exhaust air.
Exhaust Air	Exhaust air is the sample air after it has passed through the reaction/measurement/detection cell and is moving towards being expelled from the instrument.
ID and OD	These are measurements of tubing. ID is the internal diameter of tubing, OD is the outer diameter.
Multidrop	A configuration of multiple instruments connected via the same RS232 cable.
Photomultiplier Tube	A highly sensitive device which can detect extremely low levels of light (photons) and multiply the electrical signal to a point where it can be accurately measured. This is often referred to as a PMT.
Bootloader	A program that checks whether the current firmware is valid, executes the instrument warm-up. The bootloader can be entered by pressing the '+' key on the front keypad during the first 1/2 second

	after power ON and following the prompts. The bootloader enables various low level recovery tools, including updating the firmware from a USB stick.
PCA	Printed Circuit Assembly. An electronic circuit mounted on a printed circuit board to perform a specific electronic function.
Slpm	Standard litres per minute. This is the flow referenced to standard temperature and pressure conditions. For the purposes of this manual, all flows are referenced to 0 °C and 101.3 kpa (1 atm).

1.4 Background/Theory

Sulfur dioxide (SO_2) is the product of the combustion of sulfur compounds and causes significant environmental pollution. The main sources of SO_2 in the environment are from various industrial processes such as the burning of coal in power stations, the extraction of metals from ore and combustion of fuel within automobiles.

Sulfur dioxide is a noxious gas that can cause respiratory damage as well as impairing visibility when in high concentrations. Sulfur dioxide also has the potential to form acid rain (H_2SO_4) which causes health, environmental and infrastructural damage.

1.4.1 Measurement Theory

The measurement of sulfur dioxide (SO_2) is based on classical fluorescence spectroscopy principles. SO_2 exhibits a strong ultraviolet (UV) absorption spectrum between 200 - 240 nm. When SO_2 absorbs UV at this wavelength, photon emission occurs (300 - 420 nm). The amount of fluorescence emitted is directly proportional to the SO_2 concentration.

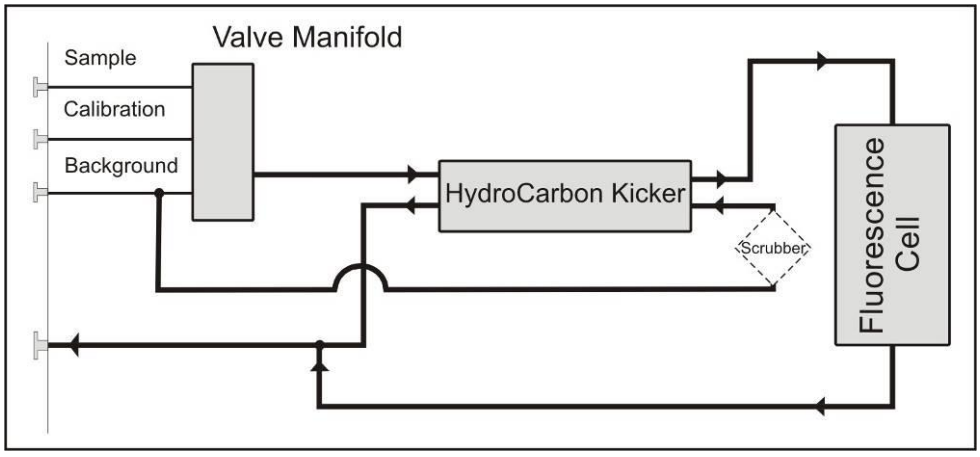

Figure 1 – Simple Pneumatic Diagram

The Serinus 50 follows these principles and measurement techniques:

- Sample air is passed through a hydrocarbon kicker which removes hydrocarbons (a common interferent).
- UV energy from a zinc discharge lamp is passed through a UV bandpass filter to produce radiation at 214 nm.

- The radiation is focused into the fluorescence cell where it is absorbed by the SO_2 molecules.
- The SO_2 molecules emit photons (fluoresce) uniformly in all directions.
- Wavelengths between 310 - 350 nm, which are specific to SO_2, pass through a bandpass filter where they reach the photomultiplier tube which measures the signal intensity.
- A reference detector monitors the emission from the zinc lamp and is used to correct for fluctuations in lamp intensity.

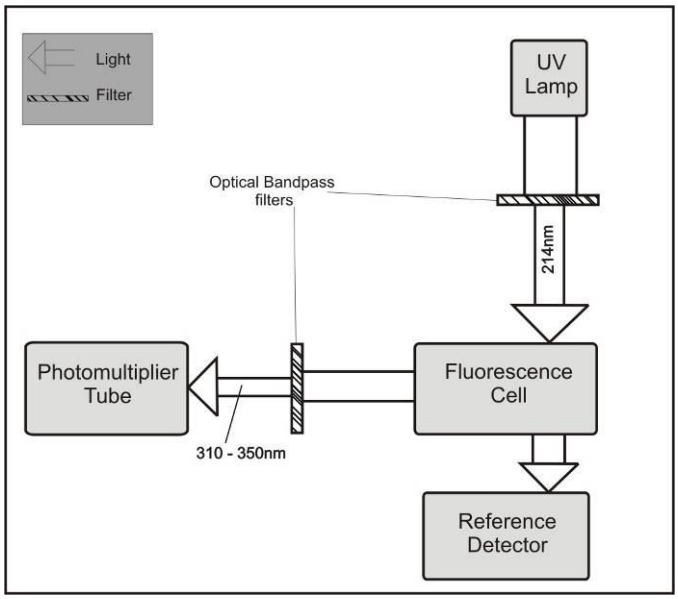

Figure 2 – Optical Measurement Theory

1.4.2 Kalman Filter Theory

The digital Kalman filter provides an ideal compromise between response time and noise reduction for the type of signal and noise present in ambient air analyser.

The Kalman filter enhances measurements by modifying the filter time base variable, depending on the change rate of the measured value. If the signal is changing rapidly, the instrument is allowed to respond quickly. When the signal is steady, a long integration time is used to reduce noise. The system continuously analyses the signal and uses the appropriate filtering time.

1.5 Instrument Description

The major components of the Serinus 50 are described below:

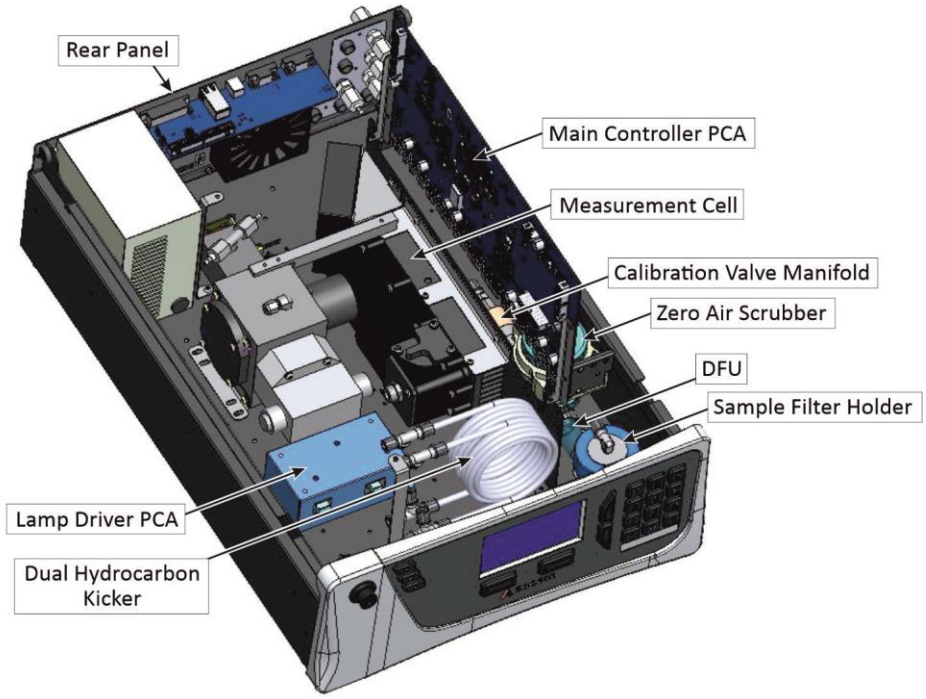

Figure 3 – Major Components of Serinus 50

1.5.1 Calibration Valve Manifold

Refer to Figure 3 for the location of calibration valve manifold. The calibration valve manifold switches between sample, calibration and background gas.

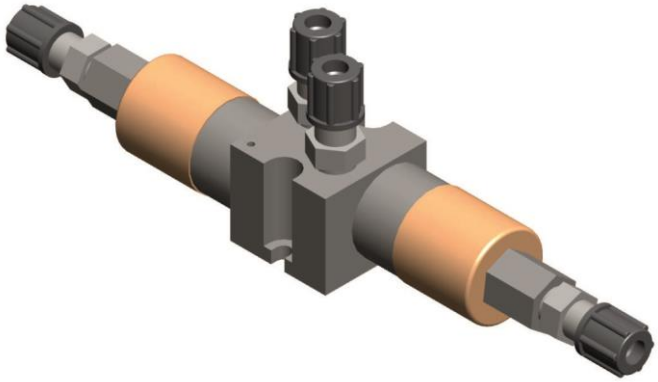

Figure 4 – Calibration Valve Manifold

1.5.2 Sample Filter Holder

Refer to Figure 3 for the location of sample filter holder. Within the sample filter holder there is a particulate filter. The particulate filter is a Teflon 5-micron (µm) filter with a diameter of 47 mm. This filter prevents all particles larger than 5 µm from entering the measurement system that could interfere with sample measurement.

Note: The 5-micron filter element should be replaced on a regular basis.

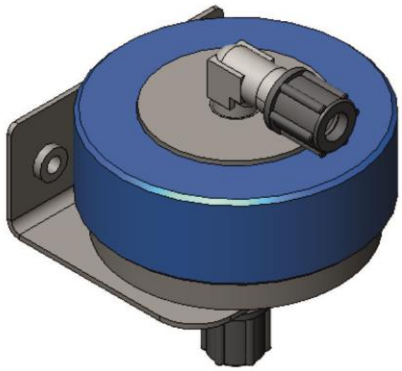

Figure 5 – Sample Filter Holder

1.5.3 Dual Hydrocarbon Kicker

Refer to Figure 3 for the location of dual hydrocarbon kicker. The dual hydrocarbon kicker removes interfering hydrocarbons from the sample air. This is achieved by using counter current exchange, where an air with a lower concentration of hydrocarbons moves in an opposite direction to air with a higher concentration. The high concentrations of hydrocarbons diffuse through a selective permeation membrane to the low concentration exhaust air and are removed. Increasing the flow of the low concentration air also increase the rate of diffusion.

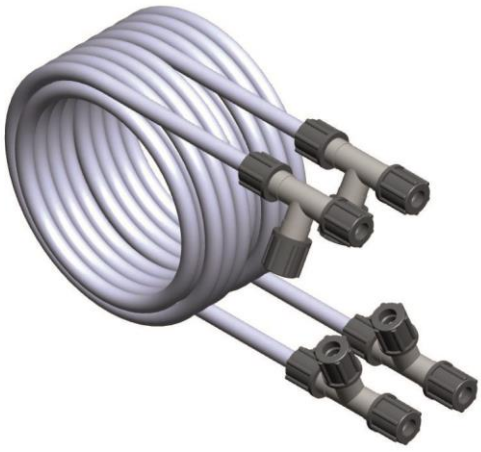

Figure 6 – Dual Hydrocarbon Kicker

1.5.4 Zero Air Scrubber

Refer to Figure 3 for the location of zero air scrubber. The zero air scrubber is an activated charcoal scrubber which draws in ambient air to create SO_2 free air used for background corrections, internal zero and bypass air for the dual hydrocarbon kicker, aiding in the removal of hydrocarbons from the sample stream prior to entering the measurement cell.



Figure 7 – Zero Air Scrubber

1.5.5 DFU

The Disposable Filter Unit (DFU) is a fine filter used to remove particulates down to 0.1 micron from the sample measurement.



Figure 8 – DFU

1.5.6 Main Controller PCA

Refer to Figure 3 for the location of main controller PCA. The main controller PCA controls all the processes within the instrument. As well as the on-board microprocessor, it contains a battery backed clock, calendar, analog to digital converters and many other circuits for signal processing and control. The ambient pressure and chassis temperature sensors are also located on this board. The main controller PCA is located above all other components within the instrument. It pivots on hinges to allow access to the components underneath.



CAUTION

Never place objects on top of the main controller PCA as it may result in damage.

1.5.7 Measurement Cell

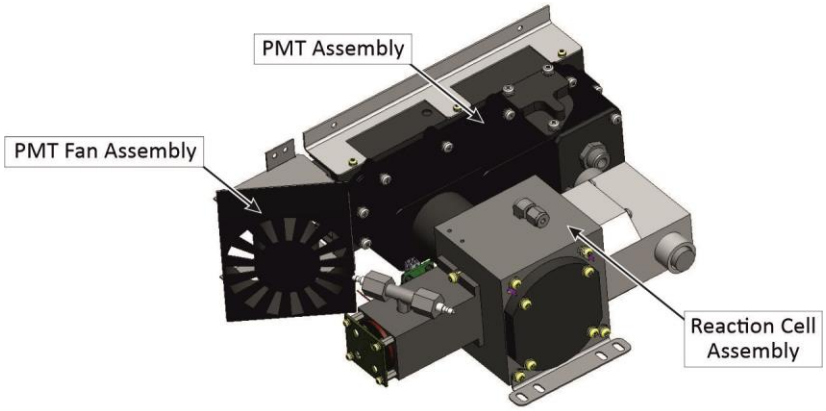

Figure 9 – Measurement Cell

1.5.7.1 PMT Assembly

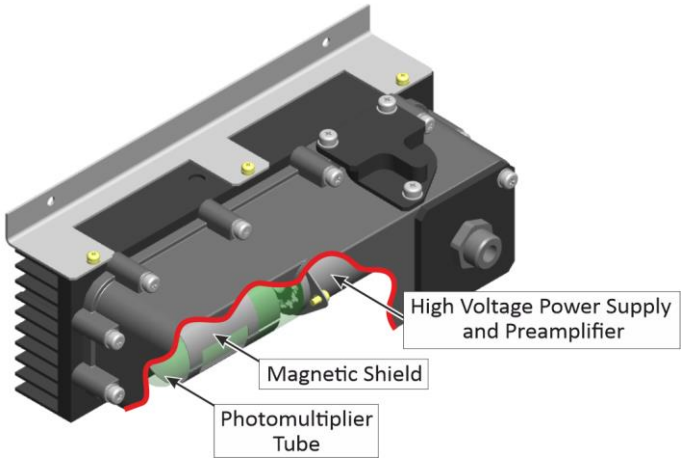

Figure 10 – PMT Assembly - 1

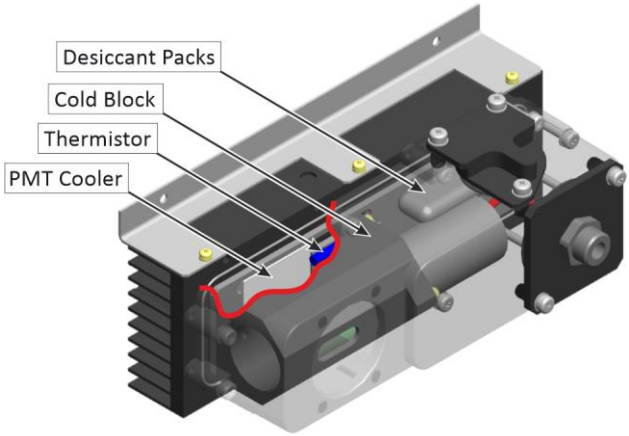

Figure 11 – PMT Assembly - 2

Photomultiplier Tube (PMT)

Refer to Figure 10 for the location of PMT. The PMT measures the amount of light reaching it. Filtered light from the reaction cell reaches the PMT, which allows for direct measurement of SO_2.

High Voltage Power Supply and Preamplifier

Refer to Figure 10 for the location of high voltage power supply and preamplifier. This is a single component within the PMT housing. Its function is to supply high voltage to the PMT and to amplify the photocurrent signal from the PMT.

Magnetic Shield

Refer to Figure 10 for the location of magnetic shield. The magnetic shield is used to protect PMT from electromagnetic radiation. Which will reduce the amount of noise generated in the PMT.

PMT Cooler and Thermistor

Refer to Figure 11 for the location of PMT cooler and thermistor. The PMT cooler and thermistor are mounted below and in the cold block respectively. They ensure that the PMT is operated at a constant 13 °C. This reduces the measurement noise of the PMT.

Cold Block

Refer to Figure 11 for the location of cold block. The cold block is holding the PMT and maintaining the temperature of PMT at 13 °C.

1.5.7.2 Reaction Cell Assembly

Refer to Figure 9 for the location of reaction cell assembly. The reaction cell is where the UV radiation from the UV lamp is absorbed by the SO_2 molecules present in the sample. The SO_2 molecules enter an excited state then they release this energy in the form of a fluorescence reaction, emitting photons. A portion of this light is filtered to a specific wavelength in the region of 310 - 350 nm by the bandpass filter which is subsequently measured by the PMT.

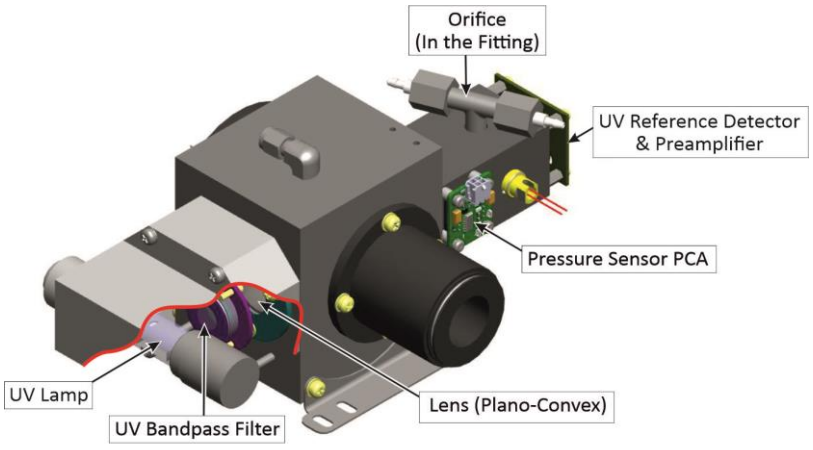

Figure 12 – Reaction Cell Assembly - 1

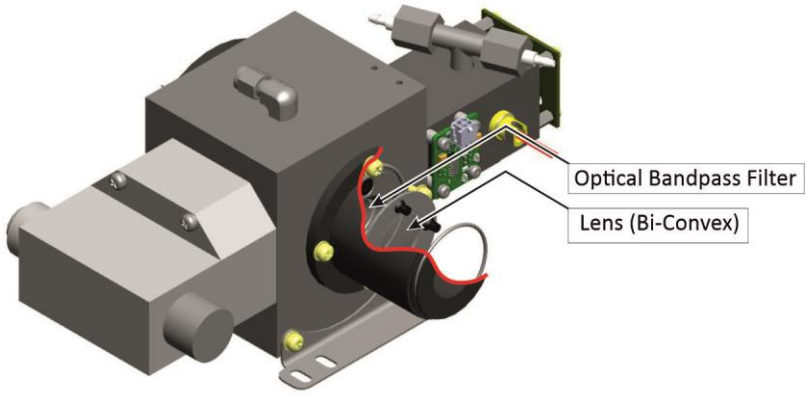

Figure 13 – Reaction Cell Assembly - 2

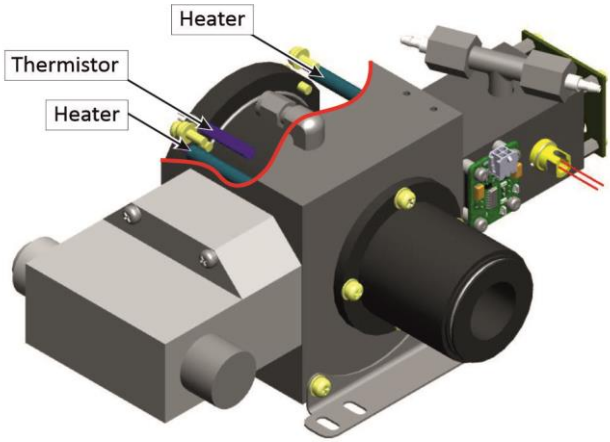

Figure 14 – Reaction Cell Assembly - 3

UV Lamp

Refer to Figure 12 for the location of UV lamp. The UV lamp is a discharge zinc lamp which emits UV radiation over a broad range.

UV Bandpass Filter

Refer to Figure 12 for the location of UV bandpass filter. The UV bandpass filter only allows UV at 214 nm through into the reaction cell.

Optical Bandpass Filter

Refer to Figure 13 for the location of optical bandpass filter. The optical bandpass filter is a coloured glass that only allows light of a specific wavelength through to the PMT (310 - 350 nm).

Lenses

Refer to Figure 12 and Figure 13 for the location of lenses. Two silica lenses are used in the optical path, the first (plano-convex) to focus UV radiation inside the reaction cell and the second (bi-convex) focuses the fluorescent light onto the PMT cathode from the SO_2 reactions.

UV Reference Detector & Preamplifier

Refer to Figure 12 for the location of UV reference detector & preamplifier. The UV reference detector monitors the intensity of UV radiation entering the reaction cell. This measurement is used to compensate for variations in UV lamp output. The preamplifier circuit board converts the current signal from reference detector to a voltage signal and provides amplification.

Orifice

Refer to Figure 12 for the location of orifice. The critical orifice is made of a high precision stainless steel and sapphire, which are located in the tee fitting on the top of the reaction cell. The critical orifice is a simple device that operates at a set temperature and requires minimal maintenance, it will passively keep the volume flow rate constant at a known value.

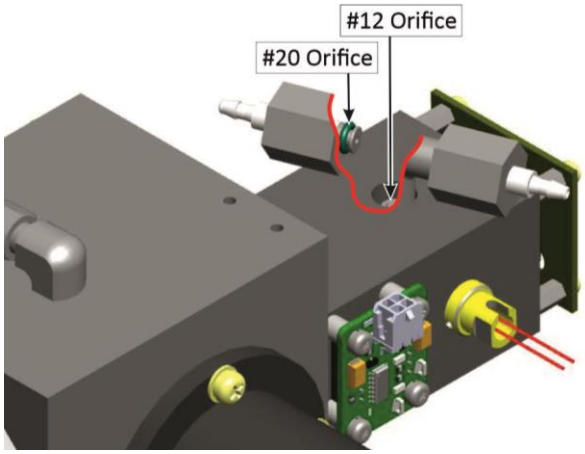

Figure 15 – Orifice

Pressure Sensor PCA

Refer to Figure 12 for the location of pressure sensor PCA. The pressure sensor PCA has an absolute-pressure transducer that is mounted on the reaction cell and sealed via a gasket. This allows the pressure sensor PCA to measure the sample air pressure in the reaction cell. This pressure reading is used to verify sample flow and correct measurement readings for pressure variations.

Heater and Thermistor

Refer to Figure 14 for the location of heater and thermistor. Heater and thermistor are mounted in the reaction cell. They are used in this instrument to keep the cell temperature at a stable and constant 50 °C.

1.5.7.3 PMT Fan Assembly

Refer to Figure 9 for the location of PMT fan assembly. The PMT fan assembly is mounted near the heatsink to remove the heat generated by PMT cooler and maintain the measurement cell temperature.

1.5.8 Lamp Driver PCA

Refer to Figure 3 for the location of lamp driver PCA. The lamp driver PCA generates a high-frequency voltage (800 - 1100 V) to start and maintain the UV lamp at a constant intensity. The lamp current is set by the Instrument and is maintained at 35 mA.

CAUTION

The lamp driver PCA contains high voltages. Ensure the instrument is turned OFF before accessing this component.

Note: The lamp driver PCA is the same type as used on the Serinus 10 O_3 Analyser. For the Serinus 50, with a REV D lamp diver PCA, set all the jumpers marked in red (JP1 - JP5) to the left (refer to Figure 16). The correct setting must be used or damage to the electronics may occur.

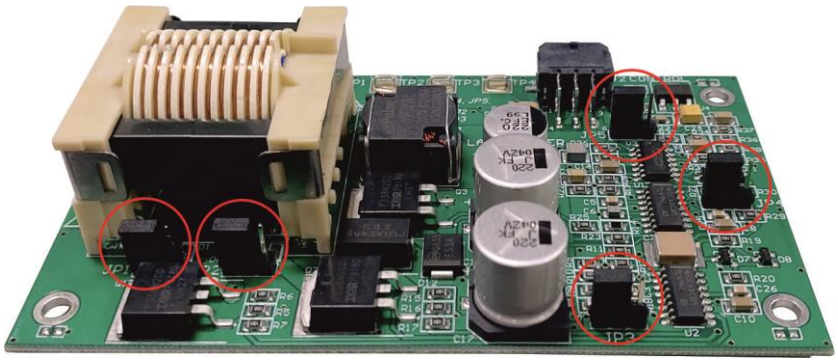

Figure 16 – Lamp Driver PCA Type Jumper Setting (REV D)

1.5.9 Pneumatic Tubing

The pneumatic tubing inside this instrument is specially designed for use in Acoem Australasia Serinus instruments. It is flexible like silicone tubing with the added inner sheath of PVDF to prevent contamination of the sample. Care should be taken when removing and inserting the tubing into the fittings.



Figure 17 – Ecotech Tubing

1.5.10 Rear Panel

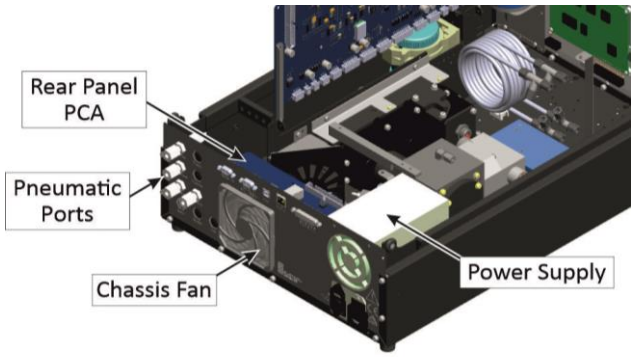

Figure 18 – Rear Panel

1.5.10.1 Rear Panel PCA

Refer to Figure 18 for the location of rear panel PCA. The rear panel PCA contains all the connections for external communications, including analog input, analog output, digital inputs, digital outputs, RS232, USB, and TCP/IP network connection (optional). Refer to Section 4.4.4 for details of all the jumper's function.

1.5.10.2 Chassis Fan

Refer to Figure 18 for the location of chassis fan. The chassis fan is assembled to the back side of the instrument to maintain the Serinus 50 temperature. Fan filter is also installed with the fan to prevent the instrument from dust.

Note: Clean the chassis fan filter on regular interval (refer to Section 6.4.2).

1.5.10.3 Power Supply

Refer to Figure 18 for the location of power supply. The power supply is a self-contained unit housed in a steel case designed to meet all the relevant safety and EMC requirements. This new revision of power supply is different to the previous revision as there is no need to set the operating voltage switch because it is autoranging.

The output of the power supply provides +12 V, +5 V, -12 V and +3.3 V to the instrument.

ON/OFF Switch

The ON/OFF switch is located on the rear panel (bottom right facing the rear of the instrument), refer to Figure 19. It is part of the power supply.



Figure 19 – Power ON/OFF Switch

1.5.10.4 Pneumatic Ports

Refer to Section 2.3.2 for pneumatic ports connection and detail.

1.5.11 Communications

Communication between the instrument and either a data logger, laptop or network can be performed with the following communication connections located on the rear panel (refer to Figure 20). These connections can be used for downloading data, onsite diagnostics, maintenance and firmware upgrades.

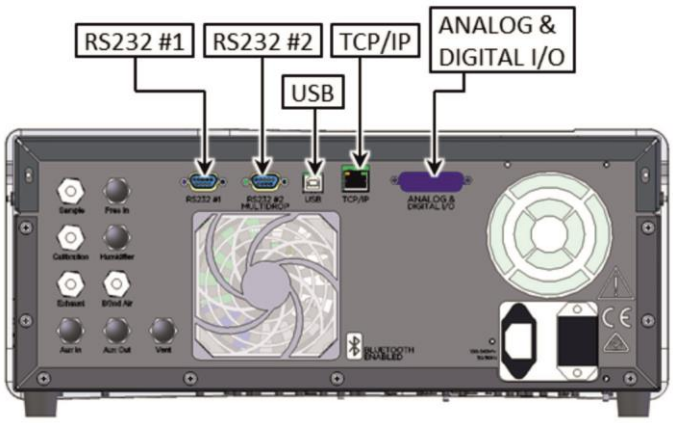

Figure 20 – Communication Connections

RS232 #1

This port is designed to be used for simple RS232 communication.

RS232 #2

This port is designed to be used for simple RS232 communication or in multidrop configuration.

USB

This port can be used for instrument communications with equipment through a standard USB port.

TCP/IP Network (optional)

This port is best used for remote access and real-time access to instruments when a network is available to connect with.

Analog & Digital I/O

The analog/digital port sends and receives analog/digital signals to other devices. These signals are commonly used to activate gas calibrators or for warning alarms.

Analog Outputs

The instrument is equipped with three user definable analog outputs. The outputs are menu selectable as voltage output 0 - 5, 0.25 - 5 or 0.5 - 5 VDC or current output 0 - 20, 2 - 20 or 4 - 20 mA. The current

output can also be configured as a voltage output of 0 - 10 V, by configuring the jumpers (JP3) on the rear panel PCA.

Refer to Section 4.4 for more detail.

Analog Inputs

The instrument is also equipped with three analog voltage inputs (0 - 5 VDC CAT 1) with resolution of 15 bits plus polarity.



CAUTION

Exceeding these voltages can permanently damage the instrument and void the warranty.

Digital Status Inputs

The instrument is equipped with eight logic level inputs (0 - 5 VDC CAT 1) for the external control of zero/span calibration sequences.



CAUTION

Exceeding these voltages can permanently damage the instrument and void the warranty.

Digital Status Outputs

The instrument is equipped with eight open collector outputs, which will convey instrument status conditions and warning alarms such as no flow, sample mode, etc.



CAUTION

Exceeding 12 VDC or drawing greater than 400 mA on a single output or a total greater than 2 A across the eight outputs can permanently damage the instrument and void the warranty.

Bluetooth

This allows for remote access of the instrument to any Android device with the **Serinus Remote Application** installed. It uses Bluetooth to control the instrument, view parameters, download data and construct real-time graphs.

This page is intentionally blank.

2. Installation

2.1 Initial Check

Packaging

The Serinus® 50 is transported in packaging specifically designed to minimise the effects of shock and vibration during transportation. Acoem Australasia recommends that the packaging be kept if there is a likelihood that the instrument is going to be relocated.

Note: The red plastic caps that seal the pneumatic connections during transport must be removed prior to operation.

Items Received

With the delivery of the Serinus 50, the user will receive the following:

Table 3 – List of Items Received

Item Name	Part No.	Image
Acoem Australasia Serinus 50 analyser	E020050	Refer to Figure 21, callout 7.
Green Ecotech Resources USB Stick	H030137-01	Refer to Figure 21, callout 10.
Manual (hardcopy optional)	M010029	-
USB Memory Stick	H030021	Refer to Figure 21, callout 9.
USB Cable	COM-1440	Refer to Figure 21, callout 8.
Keys for Slam Lock	-	Refer to Figure 21, callout 11.
Data Sheet	-	Refer to Figure 21, callout 12.
Power Lead (120 V)*	C040007	Refer to Figure 21, callout 2.
Power Lead (240 V)*	C040006	Refer to Figure 21, callout 1.
	C040008	Refer to Figure 21, callout 3.
	C040009	Refer to Figure 21, callout 4.
	C040010	Refer to Figure 21, callout 5.
	C040054	Refer to Figure 21, callout 6.

*The power lead received depends on the power supply of the country (120 V or 240 V).

Note: Check that all these items have been delivered undamaged. If any item appears damaged, contact your supplier before turning the instrument ON.

Note: It is recommended to kept packaging material for transport or storage purpose.



Figure 21 – Received Item

Opening the Instrument

Check the interior of the instrument with the following steps:

1. Refer to Figure 22. Remove the thumb screws located on the rear panel.



Figure 22 – Opening the Instrument - 1

2. Refer to Figure 23. Unlocked the slam lock using keys provided with instrument.



Figure 23 – Opening the Instrument - 2

3. Refer to Figure 24. Open the chassis lid latch by pressing in the slam lock located on the front panel.



Figure 24 – Opening the Instrument - 3

4. Refer to Figure 25. To completely remove the lid, slide the lid backwards until the rollers line up with the gaps in the track and lift the lid upwards to remove from the instrument.



Figure 25 – Opening the Instrument - 4

5. Check that all pneumatic and electrical connectors are connected. If not, reconnect.
6. Check for any visible and obvious damage. If damage exists contact your supplier and follow the instructions in claims for Damaged Shipments and Shipping Discrepancies at the front of this manual.

2.2 Installation Notes

When installing the instrument the following points must be taken into account:

- The instrument should be placed in an environment with minimal dust, moisture and variation in temperature (refer to Section 2.4 and 2.5 for specific approval set-up).
- For best results the instrument should be located in a temperature and humidity controlled environment (air conditioned shelter). An enclosure temperature of 25 - 27 °C is optimum.
- Whether in a rack or placed on a bench, the instrument should not have anything placed on top of it or touching the case.
- Instruments should be sited with easy access to the front panel (instrument screen/USB memory stick) and to the rear panel (communication ports/pneumatic connections).
- It is recommended that the sample line be as short as possible and/or a heated manifold be used for sampling (minimising moisture condensation in the sample).
- Do not pressurise the sample line under any circumstances. Sample should be drawn through the instrument under atmospheric pressure. This should be achieved by either using the internal pump option (if installed) or an external vacuum pump connected to the exhaust port of the instrument.
- When supplying span gas, ensure the flow is approximately 1.1 slpm and excess is sufficiently vented.

Note: The power ON/OFF switch is accessible from the rear of the instrument only. Install the instrument so that the ON/OFF power switch is accessible.

2.3 Instrument Set-up

After installing the instrument the following procedures should be followed to ready the instrument for monitoring.

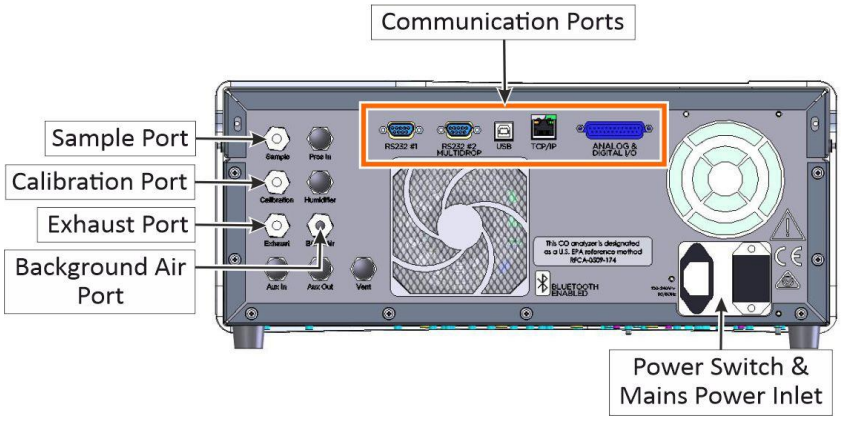

Figure 26 – Instrument Rear Panel

2.3.1 Power Connections

CAUTION

Hazardous voltages exist within the instrument. Do not remove or modify any of the internal components or electrical connections whilst the mains power is ON.

CAUTION

Always unplug the equipment prior to removing or replacing any components.

CAUTION

Do not replace the detachable mains supply cord with an inadequately rated cord. Any mains supply cord that is used with the instrument must comply with the safety requirements (250 V/10 A minimum requirement).

CAUTION

Ensure that the mains supply cord is maintained in a safe working condition.

CAUTION

When connecting the mains power to the instrument, the following must be adhered to otherwise the safety and the reliability of the instrument may be compromised.

- A three pin mains power lead with a protective earth conductor **MUST** be used.
- The mains power outlet (wall socket) must be in the range of 100 - 240 VAC, 50 - 60 Hz.
- The mains power outlet must be protected by an earth leakage protection circuit.

- Refer to Figure 27. Connect the instrument's power cord into the instrument and mains power outlet.

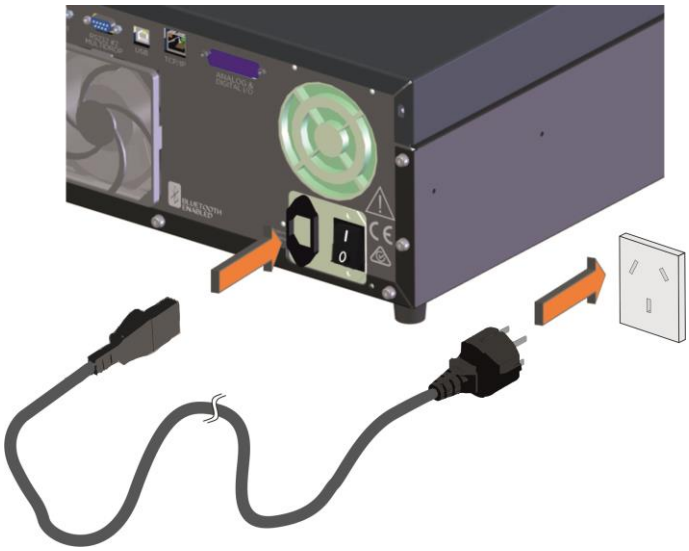

Figure 27 – Connect Power Cord

- Refer to Figure 28. Turn ON the power switch.

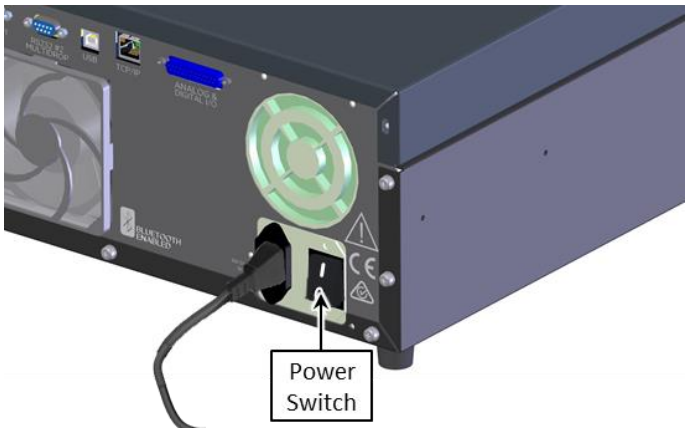

Figure 28 – Turn ON Power Switch

2.3.2 Pneumatic Connections

The Serinus® 50 has four pneumatic ports on the rear panel of the instrument; the **Sample Port**, the **Calibration Port**, the **Exhaust Port** and the **Background Air Port**. All tubing and fittings used should follow the instructions below:

- Must be made of Teflon® FEP material, Kynar®, stainless steel, glass or any other suitably inert material.
- Sample line should be no more than two meters in length with 1/8" ID and 1/4" OD.
- Sample inlet pressure should not exceed 5 kPa above ambient pressure.
- Tubing must be cut squarely and any burrs removed.

Procedure

1. Refer to Figure 29. Remove all the dust plugs.

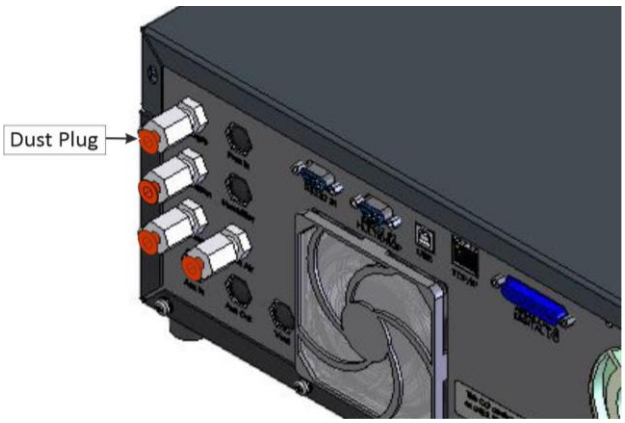

Figure 29 – Dust Plugs

2. Refer to Figure 30. Remove the sample port nut.



Figure 30 – Remove Nut

3. Refer to Figure 31. Inspect the ferrules inside the nut for correct orientation.



Figure 31 – Ferrules Correct Orientation

4. Refer to Figure 32. Replace the nut loosely, only 2 or 3 threads, on the sample port.

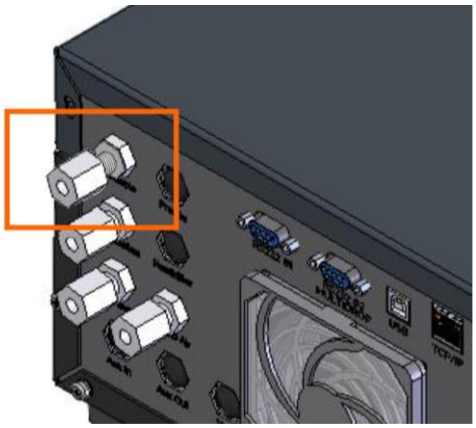

Figure 32 – Replace Nut Loosely

5. Refer to Figure 33. Push the tubing into the end of the nut until you hit the tube stop inside the fitting.



Figure 33 – Insert Tube

6. Refer to Figure 34. Tighten clockwise until finger tight.



Figure 34 – Tighten Nut

7. Nuts should be re-tightened when instrument reaches operating temperature.
8. Follow the same above procedure to connect calibration, exhaust line and background air line.

Sample Port

The sample port must be connected to an ambient source of sample air. When using a sample manifold the Serinus requires at least 1.1 slpm delivered to the sample manifold (0.73 slpm for measurement plus approximately 50% excess).

Calibration Port

The calibration port can be connected to the span/zero sources. It is recommended that a gas calibrator (Acoem Australasia's Serinus Cal 1000, 2000 and 3000) be used with a cylinder of sulfur dioxide to deliver precise concentrations of SO_2.

Note: All connections to this port should not exceed ambient pressure. A vent is required for excess span gas.

Exhaust Port

The exhaust port is where the measured sample, calibration gas, background air and kicker bypass air are exhausted from the instrument. The exhaust port should be connected to the vacuum pump using 1/4" OD tubing. The P030004 240 V vacuum pump (P030005 110 V) available from Acoem Australasia, can be used to provide the required vacuum and flow for one Serinus 50 analyser as well as two other instrument such as a Serinus 10 or Serinus 30.



CAUTION

Sulfur dioxide is a toxic gas. It is recommended that exhaust air is expelled into an unoccupied area, as it contains trace levels of sulfur dioxide. The exhaust must be a suitable distance from the sample inlet to avoid influencing the ambient measurements.

Background Air Port

The background air port is used to supply zero air to the instrument. The internal SO_2 scrubber is usually sufficient for this purpose. This air is used for background, internal zero calibration/check and hydrocarbon kicker air.

2.3.3 Communications Connections

There are a number of ways to communicate with the instrument, refer to Section 4 for detail.

2.3.4 Instrument Set-up

1. Refer to Figure 35. Open the lid and ensure the USB memory stick is installed.

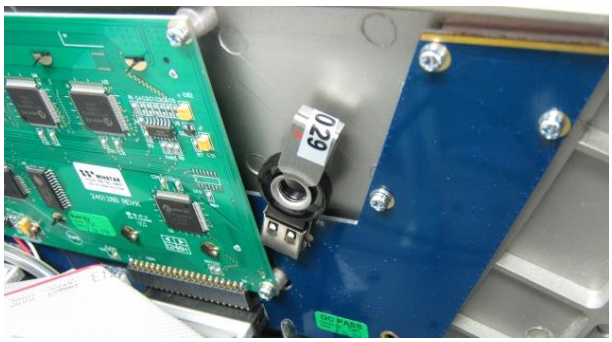

Figure 35 – Installation of USB Memory Stick

2. Refer to Figure 36. Check the battery is turned ON at the main controller PCA.

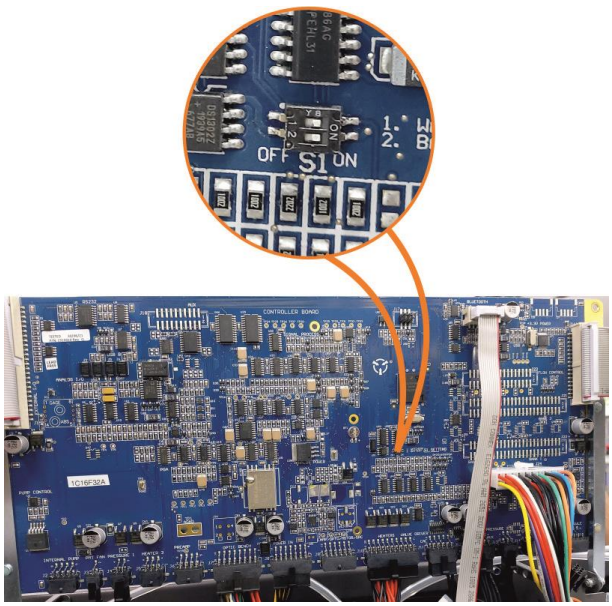

Figure 36 – Switching the Battery ON/OFF

3. Turn ON the instrument and allow the warm-up procedure to complete (refer to Section 3.1).
4. Set the time and date (refer to Section 3.4.8).
5. Set the digital filter to the desired setting (refer to Section 3.4.9).
6. Set the internal data logging options (refer to Section 3.4.23).
7. Set the analog and digital input and output settings (refer to Section 3.4.25, Section 3.4.26, Section 3.4.27 and Section 3.4.28).
8. Perform a pressure sensor check (refer to Section 6.4.10).
9. Perform a leak check (refer to Section 6.4.4).
10. Leave the instrument to warm-up and stabilise for two-three hours (if the user opted for the IZS option, refer to Section 8.7).

11. Perform a manual background (refer to Section 5.3).
12. Perform a zero precision check (refer to Section 5.4).
13. Perform a span calibration adjustment (refer to Section 5.5).
14. Follow the procedure for a multipoint precision check (refer to Section 5.7).
15. The instrument is now ready for operation.

2.4 U.S. EPA Equivalent Set-up

The Serinus 50 is designated as equivalent method EQSA-0509-188 by the U.S. EPA (40 CFR Part 53).

The instrument must be used under the following conditions to satisfy its equivalency:

Range

0 - 0.5 ppm

Ambient Temperature

20 - 30 °C

Line Voltage

105 - 125 VAC, 60 Hz

Pump

Acoem Australasia optional internal or external pump

Filter

Factory setup to meet requirement:

Instrument Settings

If the units in the Measurement Menu are changed from volumetric to gravimetric (or gravimetric to volumetric), the instrument must be calibrated.

The following menu selections must be used:

Measurement Settings

Background Interval: Enabled

Calibration Menu

Span Comp: Disabled

Diagnostics Menu

Press/Temp/Flow Comp: On

Diagnostic Mode

Operate

Control Loop

Enabled

The instrument must be operated and maintained in accordance with this user manual.

The Serinus 50 analyser is designated U.S. EPA Equivalent Method with or without the following options/items:

- Internal pump
- Rack mount assembly
- Optional Ethernet port

2.5 EN Type Approval Set-up

The Serinus 50 has been certified to TÜV Performance Standards for Continuous Ambient Air Quality Monitoring Systems, certificate number is TÜV 936/21221977/B. The Serinus 50 must be used under the following conditions to meet EN requirements:

Range

0 - 400 ppb

Ambient Temperature

0 - 30 °C

Instrument Settings

The instrument must be operated and maintained in accordance with this user manual.

The following menu selections must be used:

Calibration Menu

Span Comp:	Disabled

Diagnostics Menu

Press/Temp/Flow Comp:	On
Diagnostic Mode:	Operate
Control Loop:	Enabled

2.6 Transporting/Storage

Transporting the instrument should be done with great care. It is recommended that the packaging the Serinus was delivered in should be used when transporting or storing.

When transporting or storing the instrument the following points should be followed:

1. Turn OFF the instrument and allow it to cool down.
2. Remove all connections of pneumatic pipe, power cables and communication cables from the instrument.
3. Refer to Figure 36. If storing over a long period (six months) turn the battery OFF by the switch on the main controller PCA.
4. Remove the instrument from the rack.
5. Refer to Figure 37. Seal each pneumatic ports with a dust plug.

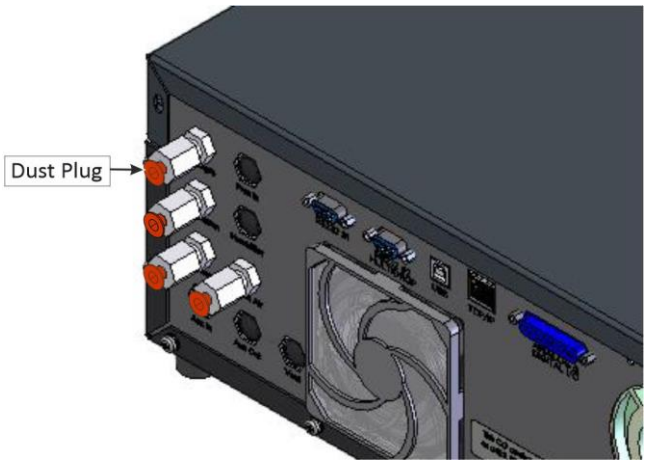

Figure 37 – Dust Plugs

6. Refer to Figure 35. Remove the USB memory stick and pack with instrument.
7. If you have the IZS option installed refer to Section 8.7.3 for specific transporting and storage instructions.
8. Place the instrument back into a plastic bag with desiccant packs and seal the bag (ideally the bag supplied upon delivery).
9. Refer to Figure 38. Place the instrument back into the original foam and box it was delivered in. If this is no longer available find some equivalent packaging that provides protection from damage.

Note: Acoem Australasia recommended to use the same packing material in which instrument is delivered.

10. The instrument is now ready for long term storage or transportation.

Note: After transport or storage the instrument must be set up and calibrated (refer to Section 2.3.4)

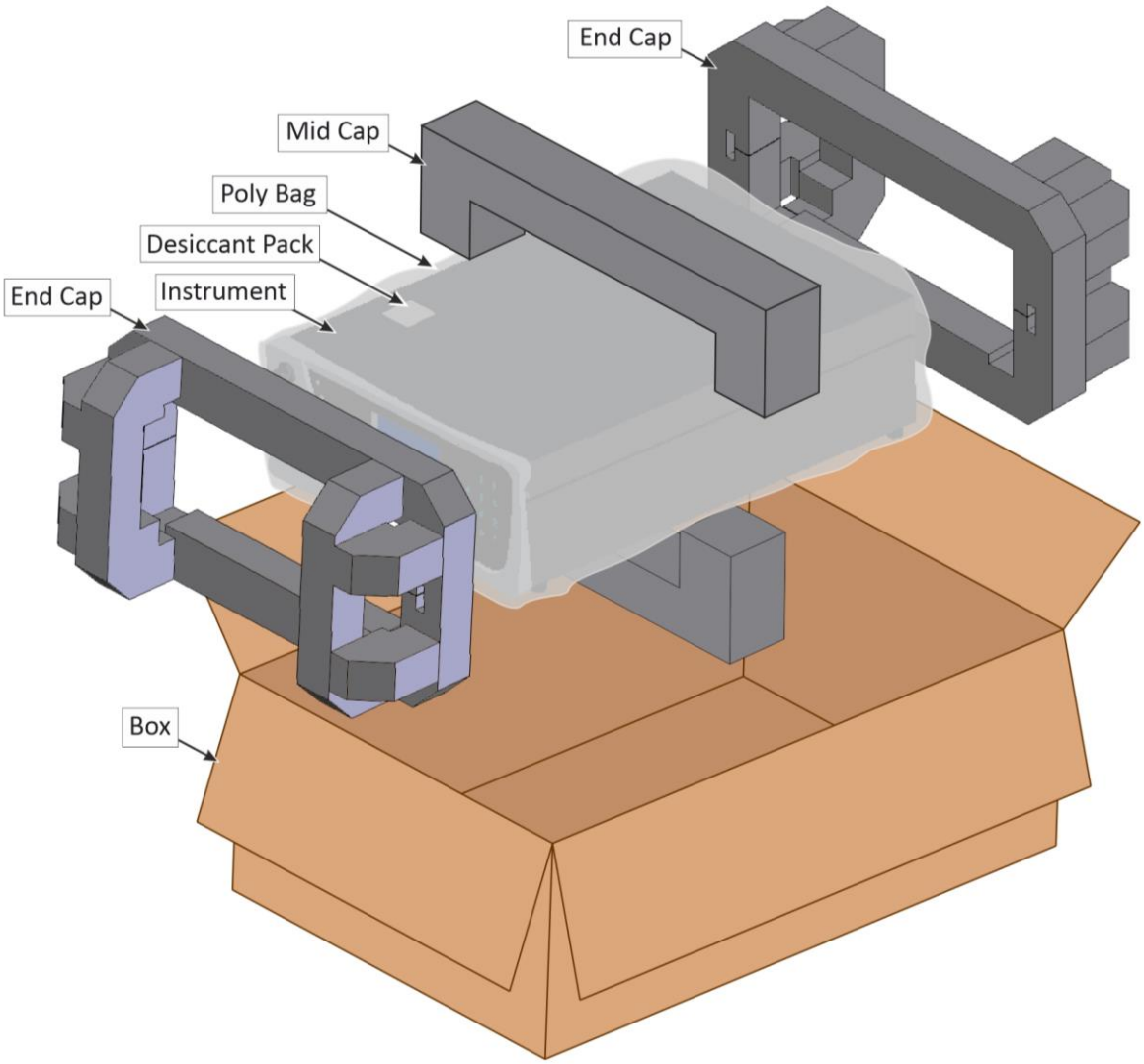

Figure 38 – Packing Instruction

3. Operation

3.1 Warm-Up

When the instrument is first turned ON it must go through a period of adjustment and calibration. No measurements are taken during this warm-up period.

The following activities occur during warm-up:

High Volt Check

Checks to see if the flag to run the high voltage tuning is active.

High Volt Adjust

The high voltage digital pot is adjusted to set the high voltage supply to the PMT for optimal range and performance.

Cell Temperature

Checks to see if the cell temperature has reached 90% of the target set point.

Lamp Stabilise

Adjusts the lamp current to 35 mA and waits for the output to stabilise.

Ref Stabilise

The instrument adjusts the reference voltage to between 2.3 and 2.7 V and waits for the reference voltage signal to stabilise.

Zero Adjust

Adjusts the measure zero pot until the concentration voltage reaches 0 V. Then it makes a small increase to the measure zero pot to bring just above zero.

After warm-up, the instrument will immediately begin making measurements (refer to Section 3.2).

3.2 Measurement

The Serinus 50 primarily operates in one continuous sample cycle. A background is performed after warm-up and once a day at 23:50. It is used to measure background fluorescence in the cell and is subtracted from sample measurements.

Table 4 – Measurement Times

Instrument State	Duration (minutes)	Description
Bkgnd Fill	4	Reaction cell fills with background air
Bkgnd Meas	5	Measurement of background air
SO2 Sample Fill	3	Reaction cell fills with sample air

Instrument State	Duration (minutes)	Description
SO2 Sample Meas	continuous	Measurement of sample air

3.3 General Operation Information

3.3.1 Keypad & Display

The instrument is operated with the use of four sets of buttons:



Figure 39 – Front Panel

Selection Buttons (1)

The selection buttons will perform the function specified directly above it on the screen. Generally this involves opening a menu, editing a value, accepting or cancelling an edit or starting an operation.

Scrolling Buttons (2)

The scrolling buttons allow the user to scroll up and down through menus or selection boxes. The scrolling buttons are also used to scroll side to side through editable fields such as: Dates, Times, Numbers etc.

On the home screen these buttons are used for adjusting the screen contrast. Press and hold the up button to increase contrast; press and hold the down button to decrease.

Keypad (3)

The keypad contains the numbers 0 - 9, a decimal point/minus key ($\overset{-}{.}$) and a space/plus key ($\underset{\text{SPACE}}{+}$).

In the few cases where letters can be entered, the number keys act like a telephone keypad. Every time a number key is pressed, it cycles through its choices. The up/down arrow keys scroll through all the numbers and the entire alphabet.

Button	Function
1	1 or space, underline
2	2, A, B, C, a, b, c
3	3, D, E, F, d, e, f
4	4, G, H, I, g, h, i
5	5, J, K, L, j, k, l
6	6, M, N, O, m, n, o
7	7, P, Q, R, S, p, q, r, s
8	8, T, U, V, t, u, v
9	9, W, X, Y, Z, w, x, y, z
0	0 or space, underline
$(^{+}_{\text{SPACE}})$ and key $(\bar{.})$	When editing a floating point number: The key $(\bar{.})$ inserts a negative sign if the editing cursor is at the start of the number and negative signs are allowed. Otherwise it moves the decimal place to the current cursor location. inserts a positive sign if the cursor is at the start of the number; otherwise it enters a space. For non-floating point numbers: These keys usually increment or decrement the current value by 1. When editing the month field of a date, the $(^{+}_{\text{SPACE}})$ and $(\bar{.})$ key change the month.

Instrument Status Light Buttons (4)

Located in the top left corner, these lights indicate the status of the instrument:

- A red light indicates that the instrument has a major failure and is not functioning.
- An orange light indicates there is a minor problem with the instrument, but the instrument may still take measurements reliably.
- A green light indicates that the instrument is working and there are no problems.

In the case of an illuminated orange or red status light, go to the **Status Menu** to find which components are failing (refer to Section 3.4.4) or press the orange or red status light button to see a pop-up box with a full list of current faults.

Press the green status light button at any time to close any open edit box or menu and come back the to the home screen.

If none of instrument status lights are ON and the keypad is backlit, this indicates that the instrument is running the bootloader. The screen will also indicate that it is in bootloader menu.

3.3.2 Home Screen

The home screen is composed of seven parts: readings (1), error/status line (2), instrument activity line (3), selection buttons (4), time/date (5), concentration units (6) and USB status (7).

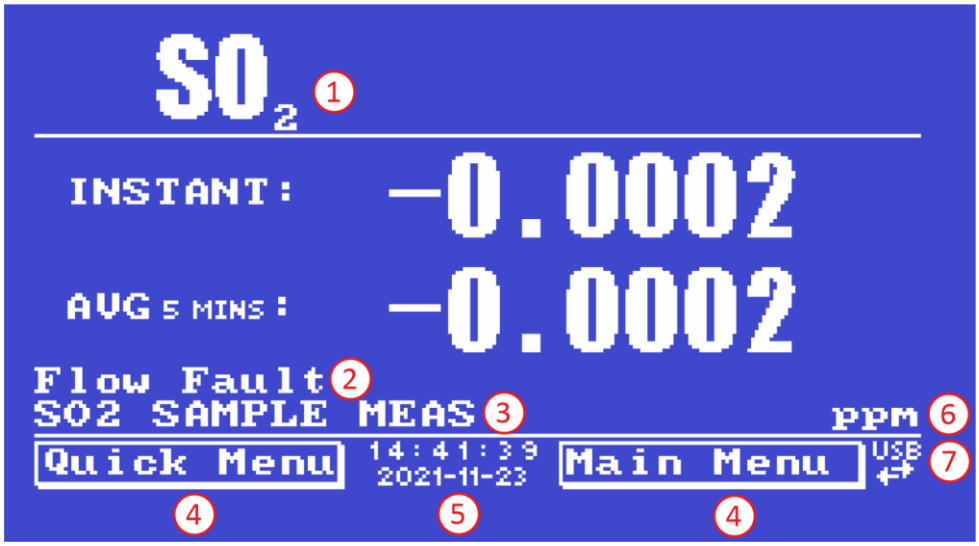

Figure 40 – Home Screen

Readings (1)

Displays the concentration being measured in real-time. The display can be configured to show just the instantaneous data or the instantaneous and average data (refer to Section 3.4.8).

Error/Status Line (2)

The error/status line provides the user with information on any problems the instrument may have. It displays the highest priority error or status condition contained in the **Status Menu** (refer to Section 3.4.4).

Instrument Activity (3)

This line shows what function the instrument is currently performing. Generally, it will show three groups of actions: Warm-up, Measurement or Calibration.

Selection Buttons (4)

These buttons are used on the home screen to enter one of two menus. The **Quick Menu** (refer to Section 3.4.1) contains all information and features necessary for scheduled maintenance. The **Main Menu** (refer to Section 3.4.2) contains all information and fields available to the user and is generally only used during initial set-up and diagnostics.

Time and Date (5)

The time and date are displayed in between the menu buttons at the bottom of the screen.

Concentration Units (6)

The instrument units are displayed in the bottom right corner of the display.

USB Detection (7)

A USB symbol will be displayed in the bottom right corner when the USB memory stick is plugged in (the USB socket is behind the front panel). If the USB symbol is not shown the USB memory stick should be inserted. Underneath the USB symbol arrows may be displayed which indicates data transfer. The USB memory stick must not be removed whilst the arrows are visible.

Note: To safely remove the USB memory stick, navigate to the **Quick Menu** and use the **Safely Remove USB Stick** function (refer to Section 3.4.1).

3.4 Menus & Screens

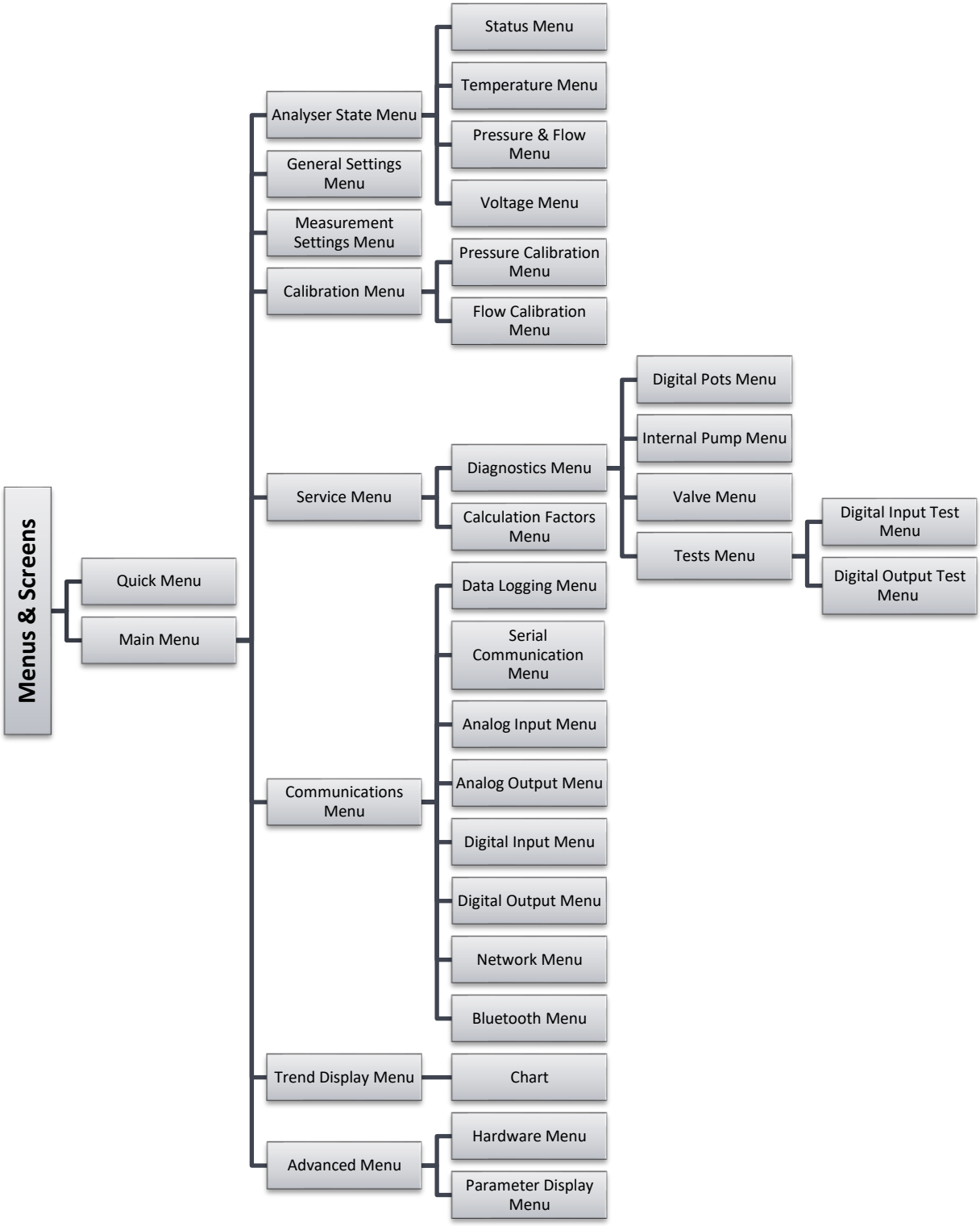

The menu system is divided into two sections selectable from the **Home Screen**: The **Quick Menu** and the **Main Menu**. The **Quick Menu** contains all information and operations necessary during scheduled maintenance visits. The **Main Menu** contains all fields that are accessible to users. It provides information on component failures and measurement parameters as well as editable fields and test procedures.

In general, editable parameters are displayed in bold font. Non-editable information is displayed in a thin font. Some parameters may become editable based on the state of the instrument.

For example, the manual calibration type and mode can only be changed when the instrument has finished the warm-up process.

3.4.1 Quick Menu

The **Quick Menu** contains all the maintenance tools in one easy to use screen. It allows operators to perform calibrations, check important parameters and review the service history.

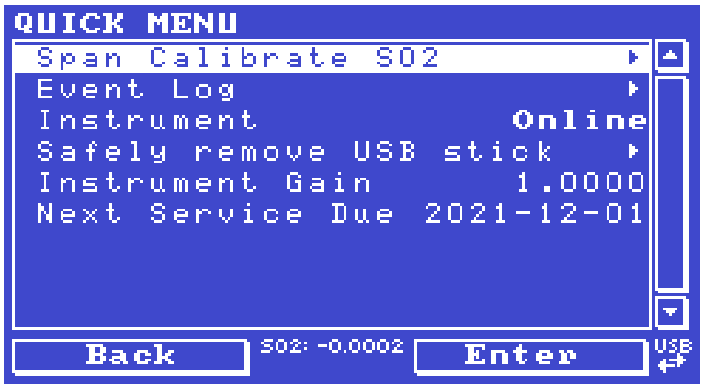

Figure 41 – Quick Menu Screen

Span Calibrate SO2	This field is used to perform a span calibration adjustment and should only be used when a known concentration of span gas is being drawn through the reaction cell and the reading is stable. Activating the span calibrate field for a named gas will open a dialog box. Enter the concentration of the span gas that the instrument is sampling and press Accept.
Event Log	This field enters a screen with a log of all the events that the instrument has performed. These events include errors and warnings. This log is stored on the removable USB memory stick. The log is organised by month. When the user enters this screen, they will be prompted to enter the month for which they wish to view events.
Instrument	This field allows the instrument to be set to either **Online** (normal instrument operation) or **In Maintenance** (data is flagged as invalid).
Safely Remove USB Stick	Always select this menu item before removing the USB memory stick or select the same menu item from the **Service Menu** (refer to Section 3.4.13). Failure to do this may cause corruption of the memory stick.
Instrument Gain	This is a multiplication factor which is used to adjust the concentration measurement to the appropriate level (set by performing a **Span**

	Calibrate). This should be recorded after each calibration in the station log book.
Next Service Due	A field that notifies the user when the next instrument service is due. This value is editable in the **Next Service Due** field of the **Advanced Menu** (refer to Section 3.4.31). This field is only displayed in the two weeks prior to the date displayed in this field or after the date has occurred.

3.4.2 Main Menu

There are seven menus on the **Main Menu** screen.

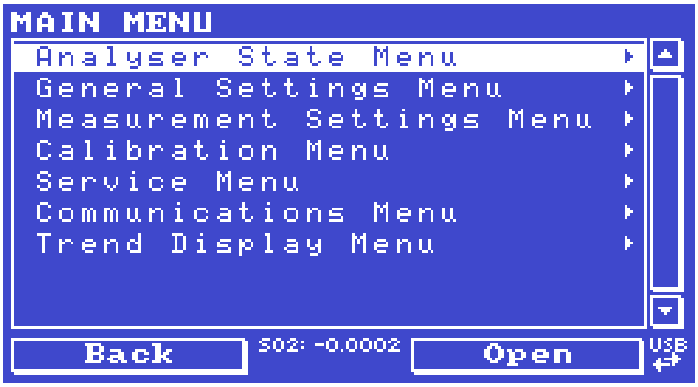

Figure 42 – Main Menu Screen

Analyser State Menu	Refer to Section 3.4.3.
General Settings Menu	Refer to Section 3.4.8.
Measurement Settings Menu	Refer to Section 3.4.9.
Calibration Menu	Refer to Section 3.4.10.
Service Menu	Refer to Section 3.4.13.
Communications Menu	Refer to Section 3.4.22.
Trend Display Menu	Refer to Section 3.4.31

3.4.3 Analyser State Menu

Main Menu → Analyser State Menu

This displays the status of various parameters that affect instrument measurements.

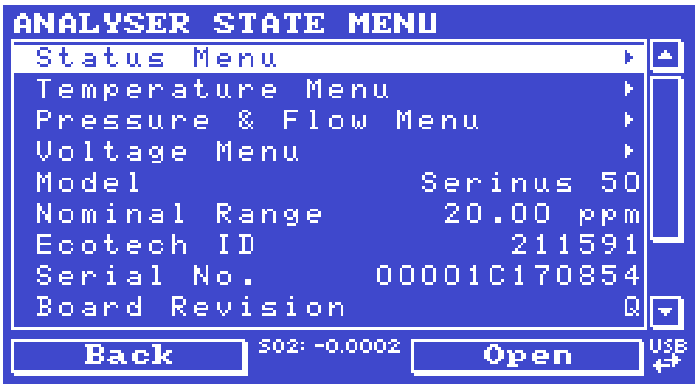

Figure 43 – Analyser State Menu Screen

Status Menu	Refer to Section 3.4.4.
Temperature Menu	Refer to Section 3.4.5.
Pressure & Flow Menu	Refer to Section 3.4.6.
Voltage Menu	Refer to Section 3.4.7.
Model	This field will display the instrument model (e.g. Serinus 50).
Nominal Range	The measurement range of the instrument.
Ecotech ID	The Ecotech ID number.
Serial No.	The main controller PCA serial number.
Board Revision	The main controller PCA version.
Firmware Ver.	This field displays the firmware version currently in use on this instrument. This can be important when performing diagnostics and reporting back to the manufacturer.
Power Failure	This field displays the time and date of the last power failure or when power was disconnected from the instrument.

3.4.4 Status Menu

Main Menu → Analyser State Menu → Status Menu

The **Status Menu** presents a list of the current **Pass/Fail** status of the main components. During warm-up, the status of some parameters will be a dashed line.



Figure 44 – Status Menu Screen

Event Log	This field enters a screen with a log of all the events that the instrument has performed. These events include errors and warnings. This log is stored on the USB memory stick. The log is organised by month. When the user enters this screen they will be prompted to enter the month for which they wish to view events.
Show Error List	This field allows the user to display the list of current errors and warnings on the screen. Pressing either of the selection buttons will clear the screen.
Next Service Due	This field is visible with the next service due date if the service is due within the next two weeks.
Maintenance Mode	Error if the system is "**In Maintenance**" (refer to Section 3.4.13).
+5V Supply	Pass if the +5 V power supply is within the acceptable range.
+12V Supply	Pass if the +12 V power supply is within the acceptable range.
+ Analog Supply	Pass if the analog power supply is within the acceptable range (+12 V).
- Analog Supply	Pass if the analog power supply is within the acceptable range (-12 V).
A2D	Fail only if a problem is detected with the analog to digital conversion.
Cell Temp.	Pass if the cell heater temperature is within ± 10% of the heater set point (refer to Section 3.4.5).
Lamp/Source	Pass if the lamp current is between 15 - 50 mA.
Perm Tube Oven **[IZS Internal Span Enabled]**	Pass if the **Perm Tube Oven** heater temperature is within ± 10% of the **Perm Tube Oven** set point in the **Hardware Menu** (refer to Section 3.4.34).
Cooler	Status of the PMT cooler. It must be 13 °C ± 10% to pass.

Ref Voltage	Pass if the reference voltage is within acceptable limits (1 - 4 V).
High Voltage	Fail if the high voltage value is < 20 or > 30 from the target. Target is 700 V.
System Power	Pass if the system has an adequate electrical supply.
Diagnostic Mode	Error if the electronics are in **Diagnostic Mode** (refer to Section 3.4.14).
Diagnostic PTF Comp	Error if the **Pres/Temp/Flow Comp.** is disabled (refer to Section 3.4.14).
Diagnostic Control	Error if the control loop is disabled (refer to Section 3.4.14).
Valve Manual Control	Error if the valve sequencing is disabled (refer to Section 3.4.17).
SO2 Conc V Saturated	Indicates if the voltage of the concentration during measurement is within the limits of the analog to digital converter (-0.26 V to 3.29 V).
Bkgnd Conc V Saturated	Indicates if the voltage of the concentration during background measurement is within the limits of the analog to digital converter (-0.26 V to 3.29 V).
Pressure Calibration	Error if the user is performing a pressure calibration.
Flow Calibration **[Internal Pump Enabled]**	Error if the user is performing a flow calibration
Flow Fault	Ok when the instrument has acceptable sample flow based on the difference between cell and ambient pressures. With the internal pump option this fault is monitored by a flow sensor.
Flow Block Temp. **[Internal Pump Enabled]**	Pass if the flow block temperature is within 10% of the heater set point (to keep a constant accurate flow).
Cell Press > Ambient	This error occurs when the pressure inside the instrument exceeds the ambient pressure.
Chassis Temp.	Pass if the chassis temperature is within the acceptable limits (0 - 50 °C).
USB Stick Disconnected	Detects whether a USB memory stick is plugged into the front USB port.
Instrument Warmup	Ok once the instrument is out of warm-up status.
Backgrounds Disabled	Ok if the menu item **Backgrounds** in the measurement settings menu is enabled.

3.4.5 Temperature Menu

Main Menu → Analyser State Menu → Temperature Menu

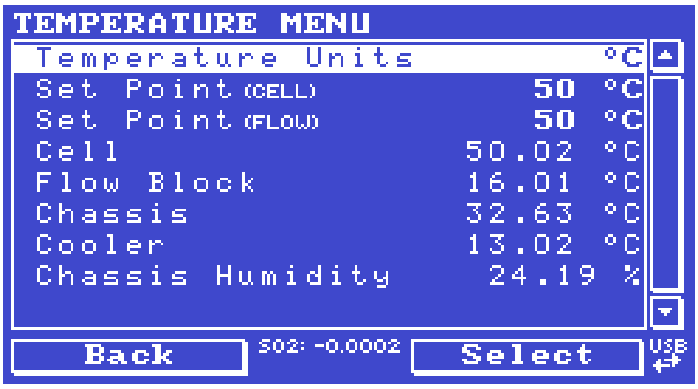

Figure 45 – Temperature Menu Screen

Temperature Units	The current temperature units of the instrument (**Celsius**, **Fahrenheit** or **Kelvin**).
Set Point (CELL)	The temperature set point of the reaction cell. The factory default is 50 °C.
Set Point (FLOW) **[Internal Pump Enabled]**	The temperature set point of the flow block heater. The factory default is 50 °C.
Cell	Displays current temperature of the reaction cell.
Flow Block **[Internal Pump Enabled]**	Displays the current temperature of the flow block.
Perm Tube Oven **[IZS Internal Span Enabled]**	Displays current temperature of the permeation tube oven.
Chassis	Displays the temperature of air inside the chassis, measured on the main controller PCA board.
Cooler	Temperature of the PMT cold block.
Chassis Humidity	Displays the humidity percentage of air inside the chassis, measured on the main controller PCA board.

3.4.6 Pressure & Flow Menu

Main Menu → Analyser State Menu → Pressure & Flow Menu

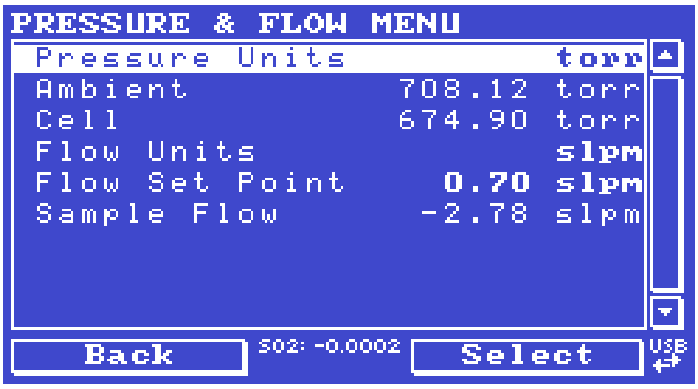

Figure 46 – Pressure & Flow Menu Screen

Pressure Units	Select the units that the pressure will be displayed in (**torr**, **PSI**, **mBar**, **ATM** or **kPa**).
Ambient	Current ambient pressure.
Cell	Current pressure within the reaction cell.
Flow Units	Select the units that the sample flow will be displayed in (**slpm** or **L/min**).
Flow Set Point **[Internal Pump Enabled]**	User selectable instrument sample flow target.
Sample Flow	Indicates the gas flow through the sample port of the instrument. The value should be ~0.73 slpm. If there is an error with the sample flow, it will read 0.00 slpm.

Note: It is the user's responsibility to select the correct **Flow Units** when calibrating the flow.

3.4.7 Voltage Menu

Main Menu → Analyser State Menu → Voltage Menu

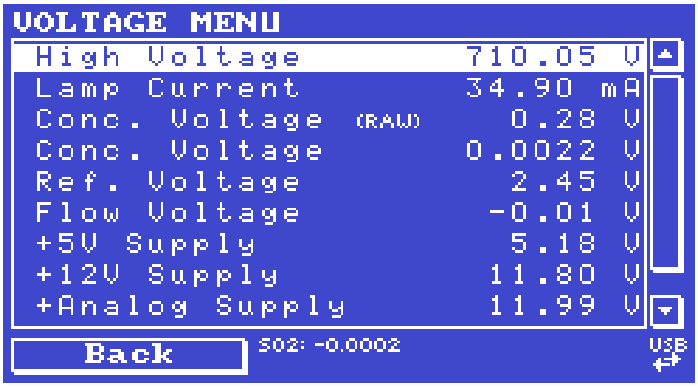

Figure 47 – Voltage Menu Screen

High Voltage	The voltage applied to the PMT (normally set to 700 volts ± 15 V for ambient applications).
Lamp Current	Displays the UV lamp current in mA.
Conc. Voltage (RAW)	Voltage from the sensor proportional to the detected signal from the reaction cell. This voltage represents the actual measurement of gas.
Conc. Voltage	Displays the detector voltage after PGA scaling.
Ref. Voltage	Displays the detector voltage after PGA scaling.
Flow Voltage **[Internal Pump Enabled]**	The current voltage measured from the sample flow.
+5V Supply	+5 V power supply.
+12V Supply	+12 V power supply.
+ Analog Supply	+12 V (primary) power supply. The value should be within ± 2 V.
- Analog Supply	-12 V (primary) power supply. The value should be within ± 2 V.

3.4.8 General Settings Menu

Main Menu → General Settings Menu

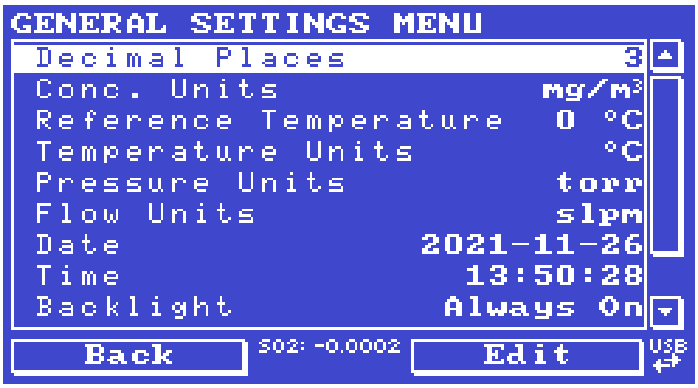

Figure 48 – General Settings Menu Screen

Decimal Places	Select the number of decimal places (0 - 5) used for the concentration displayed on the home screen.
Conc. Units	Sets the concentration units (**ppm**, **ppb**, **ppt**, **mg/m3**, **µg/m3** or **ng/m3**).
Reference Temperature **[Gravimetric Units]**	This option only appears if concentration units are set to gravimetric (**mg/m3**, **µg/m3** or **ng/m3**). Select either 0 °C, 20 °C or 25 °C as the reference temperature to be used for the conversion of the measured volumetric values to mass values.
Temperature Units	Select the units that temperature will be displayed in (**Celsius**, **Fahrenheit** or **Kelvin**).
Pressure Units	Select the units that the pressure will be displayed in (**torr**, **PSI**, **mBar**, **ATM** or **kPa**).
Flow Units	Select the units that the sample flow will be displayed in (**slpm** or **L/min**).

Date	Displays the current date and allows users to edit if required.
Time	Displays the current time and allows users to edit if required.
Backlight	Select the length of time the screen and keypad backlight remain ON after a button press. The setting **Always Off** means the backlight never turns ON; the setting **Always On** means the backlight never turns OFF and the setting **Daytime** means the backlight will turns ON from 7 am to 7 pm or 30 minutes after any operation.
Home Screen	This field allows the user to display concentrations on the home screen in two formats. The first is **Inst. only** which displays only the instantaneous concentration reading, the second is **Inst & Avg** which displays both instantaneous and average concentration on the home screen. The average is measured over the time period set in **Measurement Settings Menu** (refer to Section 3.4.9).
Char 0 has Slash	When enabled, the instrument will display the zero character with a slash (0) to differentiate it from a capital 'O'.

3.4.9 Measurement Settings Menu

Main Menu → Measurement Settings Menu

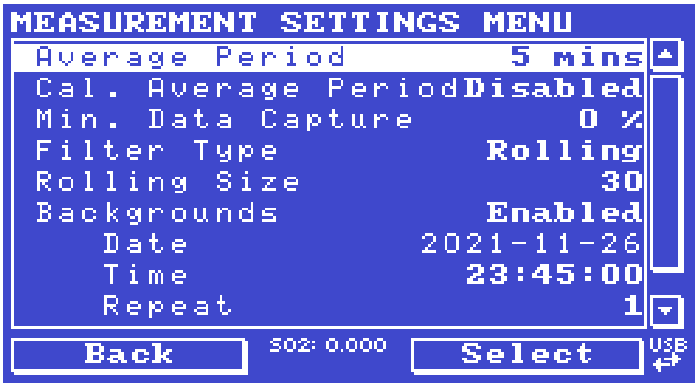

Figure 49 – Measurement Settings Menu Screen

Average Period	Set the time period over which the average will be calculated: Minutes (1, 2, 3, 4, 5, 6, 10, 12, 15, 20 or 30) or hours (1, 2, 4, 6, 8, 12 or 24) or rolling hourly averages over the last (4 or 8) hours
Cal. Average Period	When **Enabled** can set the time period over which the calibration average will be calculated when the system is in **Cal. Mode SPAN** or **ZERO**: Minutes (**1**, **2**, **3**, **4**, **5**, **6**, **10**, **12**, **15, 20** or **30**) or hours (**1**, **2**, **4**, **6**, **8**, **12** or **24**) or rolling hourly averages over the last (**4** or **8**) hours. Default is Disabled.
Min. Data Capture	Controls how much of the previous time period needs to be included before the average yields a number. The default is 0%, which reflects past behaviour of the instrument: turning on a machine with 15

	minute averaging any time between 1:01 - 1:14 with a setting of 0% would produce #### until 1:15 (because by 1:15, there was at least 1 valid measurement to construct the average from). However, a setting of 100% would mean the value stayed #### until 1:30 (because there needs to be a complete 15 minutes worth of measurements to construct the average from).
Filter Type	Sets the type of digital filter used (**None**, **Kalman**, **10 sec**, **30 sec**, **60 sec**, **90 sec**, **300 sec** or **Rolling**). The Kalman filter is the factory default setting and must be used when using the instrument as a U.S. EPA equivalent method or to comply with EN certification. The Kalman filter gives the best overall performance for this instrument.
Rolling Size **[Rolling Filter]**	Sets the number of measurements included in the rolling average. Only available if the **Filter Type** is set to **Rolling**.
Backgrounds	The default setting is enabled. When enabled it allows the user to edit the background interval via the following fields **Time**, **Repeat** and **Units**. When any of the backgrounds fields are edited the instrument will automatically calculate the date and time the next background is due to run and display under each relevant field.
Date **[Backgrounds Enabled]**	Displays the date that the next background is due to run.
Time **[Backgrounds Enabled]**	Edit and display the time that the next background will run. The time is set using a 24 hour clock.
Repeat **[Backgrounds Enabled]**	Defines an interval value for the repeat of the background based on the **Units** selected. This field indicates the delay period; once the specified amount of time has lapsed the background will automatically run again. The user can edit this field but some restriction applies depending on the **Units** selected. Default is “1”.
Units **[Backgrounds Enabled]**	This is where the user can define the type of units for the **Repeat** delay period. For example: A **Repeat** of “**1**” and **Units** of “**Days”** means that a calibration will automatically run every day at the defined time. Default is “Days”.

3.4.10 Calibration Menu

Main Menu → Calibration Menu

Calibrating the instrument should be done with care (refer to Section 5 before using these menus).

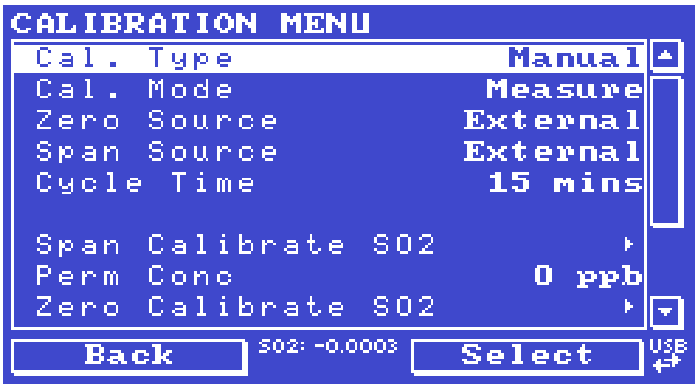

Figure 50 – Calibration Menu Screen

Cal. Type	Depending on the selection in this field, a number of extra menu items will be displayed. These are separately documented in **Manual Mode** (refer to Section 3.4.10.1) and **Timed Mode** (refer to Section 3.4.10.2). Select the **Cal. Type** field and select either **Timed** or **Manual**. **Timed** mode is an automatic calibration controlled by the: ▪ Interval between cycles ▪ Length of each calibration cycle ▪ Time when the calibration will begin ▪ Check only or automatic compensation Timed calibration with span compensation enabled **does not** fulfil U.S. EPA approval. **Manual** mode allows the user to choose the type of calibration they wish to perform and will open the appropriate valves in preparation for the user to perform a manual calibration. The setup used will depend on the **Cal. Mode** selected. **Manual** mode is set as default.
Zero Source	Select whether the instrument will sample from the external calibration port or from the internal zero source when zero gas is requested.
Span Source **[IZS Internal Span Enabled]**	Select whether the instrument will sample from the external calibration port or from the internal IZS source when span gas is requested.
Cycle Time	The duration of each **Cal. Mode** (span and zero) when performing **Cycle Mode** (refer to 3.4.10.1) or **Cal. Type** is set to **Timed** (refer to Section 3.4.10.2).
Span Calibrate SO2	This field is used to perform a span calibration and should be only used when a known concentration of span gas is running through the reaction cell and the reading is stable. Activating the span calibrate field for a named gas will open a dialog box. Enter the concentration of the span gas that the instrument is sampling and press **Accept**.

Perm Conc **[IZS Internal Span Enabled]**	This is the calculated concentration of the gas being released from the permeation oven based on the user settings defined in the **Hardware Menu.** This value should be referred to when selecting internal span mode.
Zero Calibrate SO2	This command is used to correct the zero calibration setting. This option should be used only when zero gas is running through the reaction cell (refer to Section 5 before using this command).
Manual Background	Selecting **start** will immediately perform a background.
Pressure Calibration Menu	Refer to Section 3.4.11.
Flow Calibration Menu **[Internal Pump Enabled]**	Refer to Section 3.4.12.
Pressure SO2	This field displays the reaction cell pressure measured during the last calibration.
Temperature	Reaction cell temperature when the last span calibration was performed.

3.4.10.1 Manual Mode

These items appear in the **Calibration Menu** when **Cal. Type** is set to **Manual**.

Cal. Mode	When calibration type is set to **Manual** the instruments operational mode can be chosen from the following: ▪ **Measure** (default): Is the normal measurement through the sample port. ▪ **Zero:** This mode will take air through the calibration port so that a zero calibration can be performed. Data is flagged as zero data. ▪ **Span:** This mode will take air through the calibration port so that a span calibration can be performed. Data is flagged as span data. ▪ **Cycle:** Performs a zero and a span **Cal. Mode** and then returns to measure mode. The length of time spent measuring each calibration mode is set in **Cycle Time** (refer to Section 3.4.10.1). While the instrument is still in the warm-up period (refer to Section 3.1) the **Cal. Mode** cannot be changed from **Measure** mode.

3.4.10.2 Timed Mode

These items appear in the **Calibration Menu** when **Cal. Type** is set to **Timed**.

Date	Enter the date for the next calibration to start.
Time	Enter the time that calibration will be performed. The time is set using a 24 hour clock.
Repeat	This field indicates the delay period; once the specified amount of time has lapsed the calibration will automatically run again. The user can edit this field (from 1 - 20,000 units).
Units	This is where the user can define the type of units for the **Repeat** delay period. For example: A **repeat** of "**3**" and units of "**Days"** means that a calibration will automatically be performed every three days.

Span Compensation	When **Enabled** the instrument will automatically perform a **Span Calibrate SO2** at the end of the **Cycle Time** and adjust the gain based on the **Span Level**. When **Disabled** it will do a precision check only, no adjustment is made. **Timed** mode with span compensation enabled does not fulfil U.S. EPA approval or EN certification.
Span Level	Enter the concentration of span gas expected. Used when the **Span Compensation** is **Enabled.**

3.4.11 Pressure Calibration Menu

Main Menu → Calibration Menu → Pressure Calibration Menu

Entering this menu will set the valves to the pressure calibration configuration; leaving the menu will restore the valves to normal operation (Refer to Section 5.2).

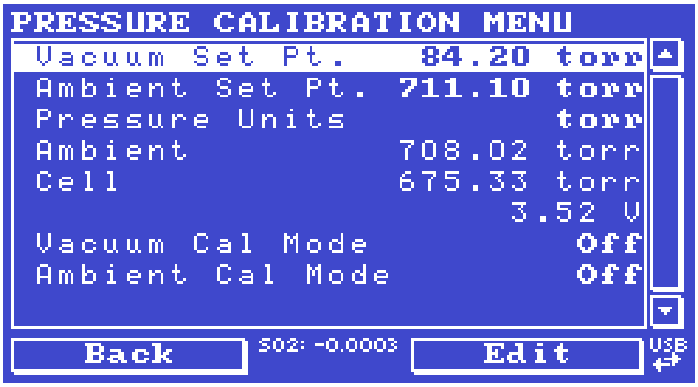

Figure 51 – Pressure Calibration Menu Screen

Vacuum Set Pt.	The zero point for the calibration. Activating this item will open a dialog box of instructions.
Ambient Set Pt.	The high point for the calibration. Activating this item will open a dialog box of instructions.
Pressure Units	Select the units that the pressure will be displayed in (**torr**, **PSI**, **mBar**, **ATM** or **kPa**).
Ambient	The current ambient pressure.
Cell	The current pressure in the reaction cell.
	The current reaction cell pressure displayed as a raw voltage.
Vacuum Cal Mode	Defaults to Off. When turned On, the valves will be set to the same state as during a **Vacuum Set Pt.** adjustment, but there is no adjustment. Used for checking the accuracy of the vacuum pressure calibration. There are no dialog boxes or prompts, so the user needs to follow similar steps and precautions as during **Vacuum Set Pt.**
Ambient Cal Mode	Defaults to OFF. Similar to **Vacuum Cal Mode**, except the valves are set to check the ambient calibration.

3.4.12 Flow Calibration Menu (Optional)

Main Menu → Calibration Menu → Flow Calibration Menu

This menu only appears when the internal pump option is installed. Refer to Section 5.8 for the calibration procedure. Setting the **Pump Control** to **Manual** will automatically disable the valve sequencing ready for flow calibration.

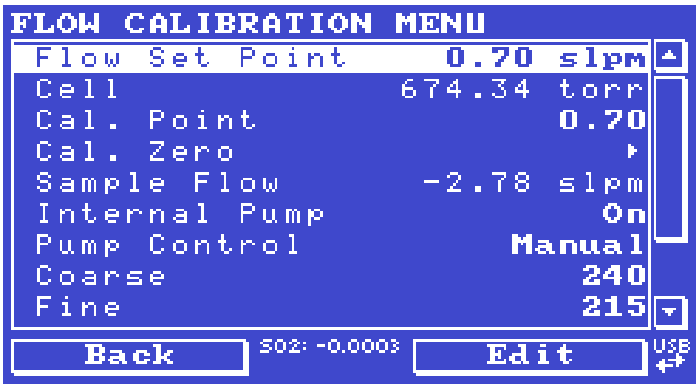

Figure 52 – Flow Calibration Menu Screen

Flow Set Point	The desired sample flow target.
Cell	The current pressure in the reaction cell.
Cal. Point	The flow at which the last flow calibration was performed. If **Pump Control** is set to **Manual** and **Internal Pump** is **ON**, this field can be edited to calibrate the current flow against a reference. Calibration must be done at or near the flow set point for best results (refer to Section 5.8).
Cal. Zero	If **Pump Control** is set to **Manual** and **Internal Pump** is **Off**, activating this command will calibrate the flow sensor zero point (refer to Section 5.8).
Sample Flow	Current sample flow through the instrument. This is only accurate when reading close to the flow calibration point.
Internal Pump	This field allows the internal pump to be turned ON or OFF. This field is only editable when the **Pump Control** field is set to **Manual**.
Pump Control	Set to **Manual** to disable the automatic **Pump Control**. **Auto** allows the flow PID to modify the pump coarse and fine settings. **START** will transition to **Auto** after one second.
Coarse	Internal pump speed control (Coarse). This field is only editable when the **Pump Control** field is set to **Manual**.
Fine	Internal Pump speed control (Fine). This field is only editable when the **Pump Control** field is set to **Manual**.
Valve Menu	Refer to Section 3.4.17.

3.4.13 Service Menu

Main Menu → Service Menu

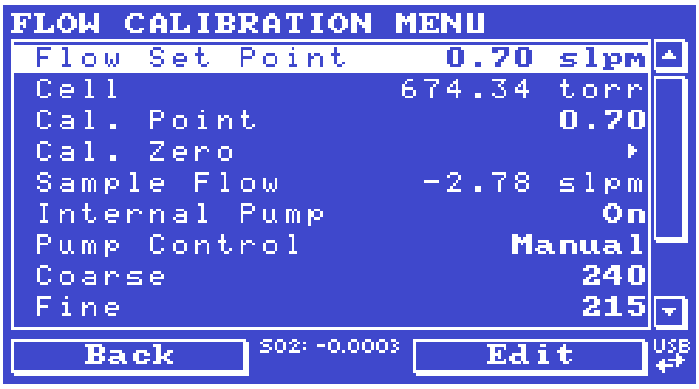

Figure 53 – Service Menu Screen

Diagnostics Menu	Refer to Section 3.4.14.
Calculation Factors Menu	Refer to Section 3.4.21.
Load Auto-Backup Config.	Loads the auto-backup configuration file. The configuration is automatically backed up every night at midnight.
Load Configuration	Loads a user selectable configuration file from the USB memory stick.
Save Configuration	Saves all of the EEPROM-stored user-selectable instrument configurations to the USB memory stick (calibration and communication settings, units, instrument gain, etc.). If there are problems with the instrument use this function to save settings to the removable USB memory stick and send this file (together with the parameter list save) to your supplier with your service enquiry.
Save Parameter List	Saves a text file of various parameters and calculation factors. If the user has problems with the instrument use this function to save settings to the removable USB memory stick and send this file (together with the configuration save) to your supplier with your service enquiry.
Instrument	This field allows the instrument to be set to either **Online** (normal instrument operation) or **In Maintenance** (data is flagged as invalid).
Next Service Due	Displays when the next scheduled service is due.
Safely Remove USB Stick	This command must be activated to safely remove the USB memory stick.
System Restart	Activating this will restart the instrument.

3.4.14 Diagnostics Menu

Main Menu → Service Menu → Diagnostics Menu

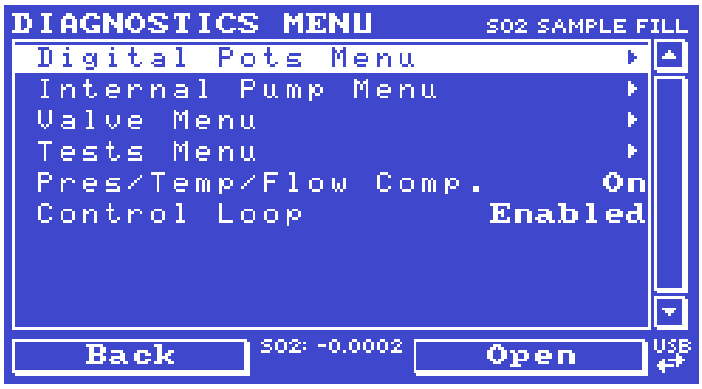

Figure 54 – Diagnostics Menu Screen

Digital Pots Menu	Refer to Section 3.4.15.
Internal Pump Menu **[Internal Pump Enabled]**	Refer to Section 3.4.16.
Valve Menu	Refer to Section 3.4.17.
Tests Menu	Refer to Section 3.4.18.
Pres/Temp/Flow Comp.	**On** (default): Is used to compensate instrument measurements for environmental fluctuations that might affect readings (pressure, temperature and flow). **Off:** Is used only when running diagnostics.
Control Loop	**Enabled** (default): Allows the instrument to automatically adjust digital pots and other outputs. **Disabled:** Prevents the instrument from changing most outputs so the service technician can manually control them.

3.4.15 Digital Pots Menu

Main Menu → Service Menu → Diagnostics Menu → Digital Pots Menu

Digital pots are electronically controlled digital potentiometers used for adjustments to operations of the instrument. Each of the digital pots can go from 0 - 255. This menu should be accessed only during diagnostics.

Unless the **Control Loop** is **Disabled** (refer to Section 3.4.14), changes to the pots may be modified by the instrument. This is intentional; some diagnostics are best done with instrument feedback and some are best done without.

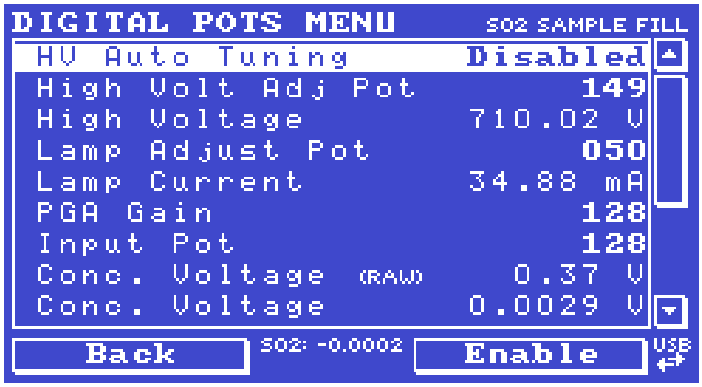

Figure 55 – Digital Pots Menu Screen

HV Auto Tuning	Disabled	When the instrument first starts it will tune the high voltage supply by automatically setting the **High Volt Adj Pot**. After a stable value is reached the instrument will **Disable** the **HV Auto Tuning**. You can force the instrument to re-tune the high voltage supply by setting this field to **Enabled** and rebooting the instrument.
High Volt Adj Pot	145 - 165	Allows manual adjustment of the PMT high voltage supply.
High Voltage	690 - 715	The voltage applied to the PMT.
Lamp Adjust Pot	20 - 200	Adjusts the UV lamp current.
Lamp Current	34 - 36	Displays the UV lamp current in mA.
PGA Gain	1 - 128	Displays the gain of the PGA.
Input Pot	128	Reduces the raw signal to measurable level.
Conc. Voltage (raw)	0 - 3.1	The concentration voltage measured by the analog to digital converter.
Conc. Voltage	0 - 3.1	The concentration voltage after adjustment for the PGA gain factor.
Meas. Zero Pot	25 - 220	Maintains the electronic zero adjustment.
Ref. Zero Pot	128	Offset adjustment for the reference voltage.

Ref. Gain Pot	10 - 100	Adjusts the reference voltage. Occurs at start up and when the reference voltage is too far from the target voltage (2.5 V).
Ref. Voltage	1.5 - 3.5	The reference voltage of the detector.
Diagnostic Mode	Operate	**Operate** (default): Puts the instrument in normal operation mode. **Preamp:** Injects an artificial test signal into the Preamplifier module mounted in the optical bench to verify that the Preamplifier, cabling and electronic circuitry on the main controller PCA is operating correctly. When in this **Diagnostic Mode**, adjust the **Diagnostic Test Pot** from 0 - 255. This will produce a change in the concentration voltage as well as the indicated gas concentration. **Electrical:** Injects an artificial test signal into the electronic processing circuitry on the main controller PCA to verify that the circuitry is operating correctly. When in this **Diagnostic Mode**, adjust the **Diagnostic Test Pot** from 0 - 255. This will produce a change in the concentration voltage as well as the indicated gas concentration. **Optic** [Optional]: Emits artificial light into the **Reaction Cell** to simulate a real fluorescence emission. This will verify that the PMT, Preamp and electronic circuitry on the main controller PCA is operating correctly. When in this **Diagnostic Mode**, adjust the **Diagnostic Test Pot** from 0 - 255. This will produce a change in the concentration voltage as well as the indicated gas concentration. This menu item is only available if you have installed the optical test lamp (refer to Section 3.4.34).
Diagnostic Test Pot	0	This Digital Pot is used for diagnostics only. When in the **Electrical**, **Preamp** or **Optic Diagnostic Mode**, this Digital Pot should be adjusted from 0 - 255. This will produce a change in the concentration voltage as well as the indicated gas concentration.

3.4.16 Internal Pump Menu (Optional)

Menu → Service Menu → Diagnostics Menu → Internal Pump Menu

This menu only appears when the internal pump option is installed. Setting the **Pump Control** to Manual will automatically disable the valve sequencing.

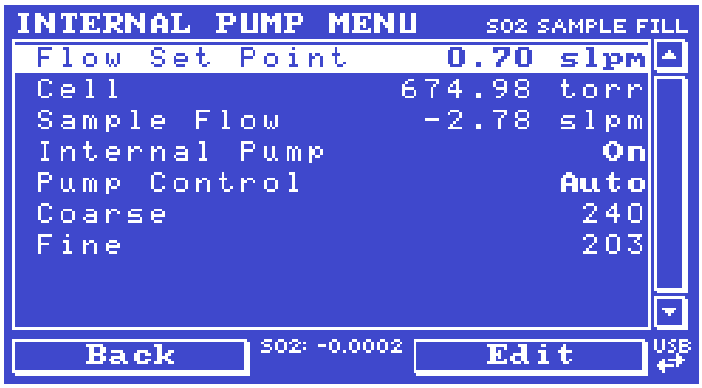

Figure 56 – Internal Pump Menu Screen

Flow Set Point	The desired sample flow target.
Cell	The current pressure in the measurement cell.
Sample Flow	Current gas flow. This is only accurate when reading close to the flow calibration point.
Internal Pump	This field allows the internal pump to be turned ON or OFF. If the user adjusts this field the **Pump Control** will automatically change to **Manual**.
Pump Control	Set to **Manual** to disable the automatic flow control. **Auto** allows the flow PID to modify the pump coarse and fine settings. **START** will transition to **Auto** after one second.
Coarse	Internal pump speed control (Coarse). This field is only editable when the **Pump Control** field is set to **Manual**.
Fine	Internal Pump speed control (Fine). This field is only editable when the **Pump Control** field is set to **Manual**.

3.4.17 Valve Menu

Main Menu → Service Menu → Diagnostics Menu → Valve Menu

The **Valve Menu** allows the user to observe the instrument controlled switching of the valves. If the valve is **On** it means the valve is energised. When a three way valve is in the **On** state it will now be in the NC (normally closed) position as shown in the plumbing schematic. When the **Valve Sequencing** is **Disabled** the user has the ability to turn the valve **Off** and **On** manually. It is recommended that the **Valve Menu** be used by a trained technician following the plumbing schematic (refer to Section 9.5).

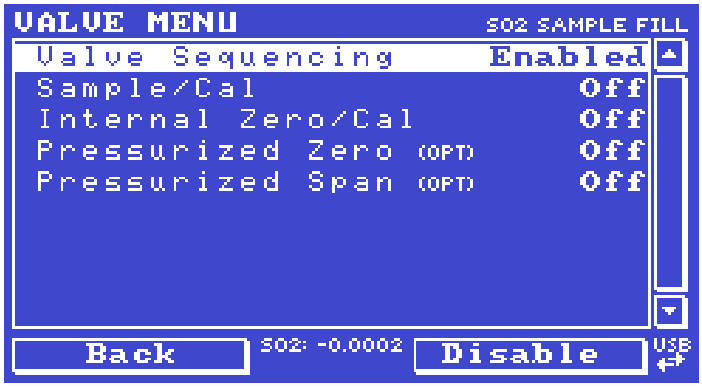

Figure 57 – Valve Menu Screen

Note: When interpreting the information below regarding the flow path through the valve note that (NC = Normally Closed), (NO = Normally Open) and (C = Common).

Valve Sequencing	When **Enabled** the valves will turn ON and OFF under the instruments control (even if the user has manually turned **Off** or **On** a valve). When **Disabled** the valves will change only in response to a user's action.
Sample/Cal	Indicates if the **Sample/Cal** valve on the **Calibration Valve Manifold** is **Off** or **On**. This will determine the port the instrument draws its sample from. **Off** = Flow from NO to C (drawing sample from the **Sample Port**). **On** = Flow from NC to C (drawing sample from the **Calibration Port**).
Internal Zero/Cal	Indicates if the **Internal Zero/Cal** valve on the **Calibration Valve Manifold** is **Off** or **On**. This will determine the port the instrument draws its sample from, when selecting **Cal. Mode → Zero**. **Off** = Flow from NO to C (drawing sample from the **BGnd Air Port**). **On** = Flow from NC to C (drawing sample from the **Calibration Port**).
Pressurised Zero (OPT)	Indicates if the optional pressurised zero port valve is **Off** or **On** (refer to Section 8.8).

Pressurised Span (OPT)	Indicates if the optional pressurised span port valve is **Off** or **On** (refer to Section 8.8).
Internal Span A **[IZS option]**	When **Internal Span A** and **B** are **On** the instrument will sample from the **BGnd Air Port** drawing internal zero or internal span depending on the **Internal Zero/Cal** valve (refer to Section 8.7).
Internal Span B **[IZS option]**	Same as **Internal Span A** above (refer to Section 8.7).

3.4.18 Tests Menu

Main Menu → Service Menu → Diagnostics Menu → Tests Menu

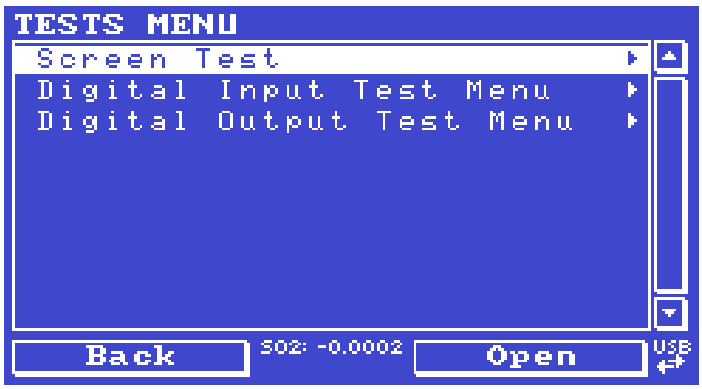

Figure 58 – Tests Menu Screen

Screen Test	Performs a screen test by drawing lines and images on the screen so that the operator can determine if there are any faults in the screen. Press a keypad key to step through the test. The up and down arrow keys will adjust the contrast.
Digital Input Test Menu	Refer to Section 3.4.19.
Digital Output Test Menu	Refer to Section 3.4.20.

3.4.19 Digital Input Test Menu

Main Menu → Service Menu → Diagnostics Menu → Tests Menu → Digital Input Test Menu

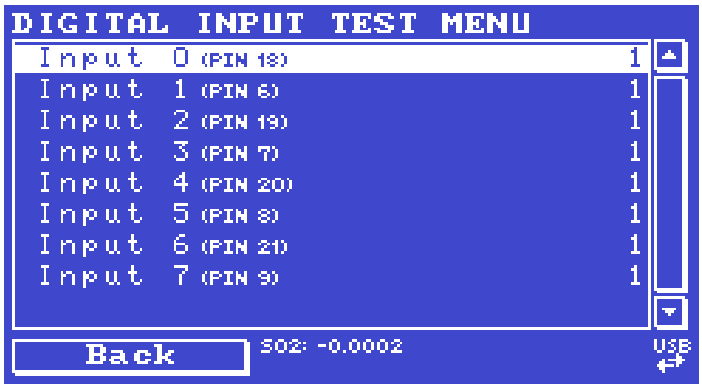

Figure 59 – Digital Input Test Menu Screen

Input 0..7	Displays the status of the 0 - 7 digital input pins and their corresponding pin out on the analog & digital I/O socket (refer to Figure 84). Value will be 0 or 1.

Note: Entering the Digital Inputs Menu will temporarily disable all digital and analog input/outputs. This will affect logging via these outputs. Exiting the menu restores automatic control.

3.4.20 Digital Output Test Menu

Main Menu → Service Menu → Diagnostics Menu → Tests Menu → Digital Output Test Menu



Figure 60 – Digital Output Test Menu Screen

Automated Test	When started will automatically step through each output, turning it **On** and **Off**.
Output 0..7	Displays the state of the output pin (**On** or **Off**) and allows the user to manually set the state.

Note: Entering the **Digital Outputs Menu** will temporarily disable all digital and analog input/outputs. This will affect logging via these outputs. Exiting the menu restores automatic control.

3.4.21 Calculation Factors Menu

Main Menu → Service Menu → Calculation Factors Menu

The **Calculation Factors Menu** provides the user with the values used to calculate different aspects of measurement and calibration.

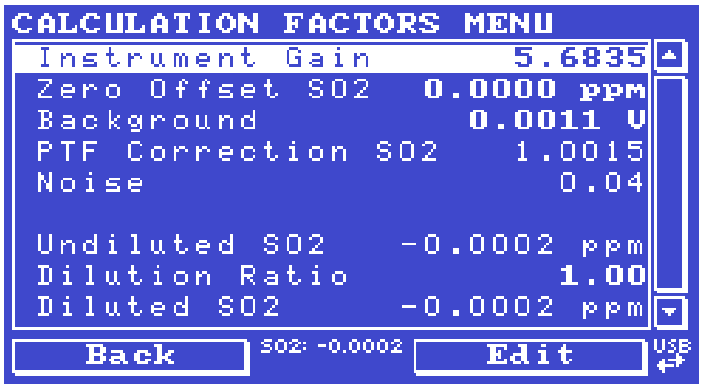

Figure 61 – Calculation Factors Menu Screen

Instrument Gain	A multiplication factor used to adjust the concentration measurement to the appropriate level (set at calibration).
Zero Offset SO2	This field displays the offset created from a zero calibration. This is the concentration measured from zero air and is subtracted from all readings.
Background	The correction factor calculated from the background cycle (used to eliminate background interferences).
PTF Correction SO2	Displays the correction factor applied to the concentration measurement. This correction is for changes in pressure, temperature and flow since the last calibration.
Noise	The standard deviation of the concentration. The calculation is as follows: Take a concentration value once every two minutes. Store 25 of these samples in a first in, last out buffer. Every two minutes, calculate the standard deviation of the current 25 samples. This is a microprocessor-generated field and cannot be set by the user. This reading is only valid if zero air or a steady concentration of span gas has been supplied to the instrument for at least one hour.
Undiluted SO2	Displays the actual reading on the analyser before the dilution ratio is applied. If the Dilution ratio is 1 both **Undiluted SO2** and **Diluted SO2** field will be the same value.

Dilution Ratio	Entering a value here will multiply the displayed and recorded measurements by the dilution amount. For example, if the instrument is measuring a source where the average concentration is above the upper limit of the measurement range, a dilution probe with a fixed dilution ratio can be used to reduce the level measured by the instrument, so for a 4:1 dilution ratio, enter a value of 4. Enter the ratio here so the analyser can display the correct value on the instrument. The default value is 1.00 (this indicates no dilution is applied).
Diluted SO2	Displays the current reading on the analyser after the dilution ratio is applied. If the Dilution ratio is 1 both **Undiluted SO2** and **Diluted SO2** field will be the same value.

3.4.22 Communications Menu

Main Menu → Communications Menu

Configures how the instrument communicates with external instrumentation and data loggers.



Figure 62 – Communications Menu Screen

Data Logging Menu	Refer to Section 3.4.23.
Serial Communication Menu	Refer to Section 3.4.24.
Analog Input Menu	Refer to Section 3.4.25.
Analog Output Menu	Refer to Section 3.4.26.
Digital Input Menu	Refer to Section 3.4.27.
Digital Output Menu	Refer to Section 3.4.28.
Network Menu (Optional)	Refer to Section 3.4.29.
Bluetooth Menu	Refer to Section 3.4.30.

3.4.23 Data Logging Menu

Main Menu → Communications Menu → Data Logging Menu

When editing the numeric or text menus, the "-" key will delete the current parameter and move the others up to take its place; the "+" key will insert a parameter at the current location and move the ones below it down. The internal logger can log a maximum of 12 parameters.



Figure 63 – Data Logging Menu Screen

Data Log Interval	Displays the interval at which the data is saved to the USB memory stick. Selecting a **1 sec** interval may result in occasional measurements not being logged or slow response to serial commands.
Cal. Log Interval	When enabled displays the interval at which the data is saved to the USB memory stick for the calibration time period. This occurs when the system is in **Cal. Mode SPAN** or **ZERO**. Selecting a **1 sec** interval may result in occasional measurements not being logged or slow response to serial commands. Seconds (**1**, **2**, **5**, **10**, **15**, **30**) or Minutes (**1**, **2**, **3**, **5**, **10**, **15, 20** or **30**) or hours (**1**, **2**, **4**, **6**, **8**, **12** or **24**). Default is **Disabled**.
Data Log Setup –Numeric	Numeric list of the parameters logged. This is a quicker way to enter parameters (for lists of parameters refer to Table 47).
Data Log Setup –Text	Select from a list of loggable parameters by name.

3.4.24 Serial Communication Menu

Main Menu → Communications Menu → Serial Communication Menu



Figure 64 – Serial Communication Menu Screen

Serial ID	This is the ID of the instrument when using multidrop RS232 communications. This ID can be changed to support multiple instruments on the same RS232 cable.
Bayern-Hessen ID **[Bayern-Hessen Protocol]**	This is the Bayern-Hessen ID used by the Bayern-Hessen Protocol.
SO2 ID **[Bayern-Hessen Protocol]**	This is the ID of the SO_2 gas used by the Bayern-Hessen Protocol.
Service port (RS232 #1) **Multidrop port (RS232 #2)**	The port parameters below are repeated for each serial port.
Serial Delay	Some older communication systems require a delay before the instrument responds to a serial command. The number of milliseconds of delay required (0 - 1000). The default is 0, meaning the instrument responds as quickly as possible to any serial request.
Baudrate	Sets the baud rate for this serial port (**1200**, **2400**, **4800**, **9600**, **14400**, **19200**, **38400** or **115200**).
Parity	This controls the Parity of RS232 communication. This should be left at the default **None**, unless your system requires otherwise.
Protocol	Sets the protocol used for this serial port (**Advanced**, **ModBus**, **EC9800** or **Bayern-Hessen**). The protocol must be set to **Advanced** for Acoem Australasia supplied software.
Endian **[Modbus Protocol]**	Select **Little** or **Big** endian mode for ModBus protocol.

3.4.25 Analog Input Menu

Main Menu → Communications Menu → Analog Input Menu

The Serinus supports three analog inputs from the analog & digital I/O port. Each input is a 0 - 5 volt CAT 1 input that can be scaled and logged to the USB memory stick or accessed remotely as parameters 199 - 201.

CAUTION

Exceeding these voltages can permanently damage the instrument and void the warranty.

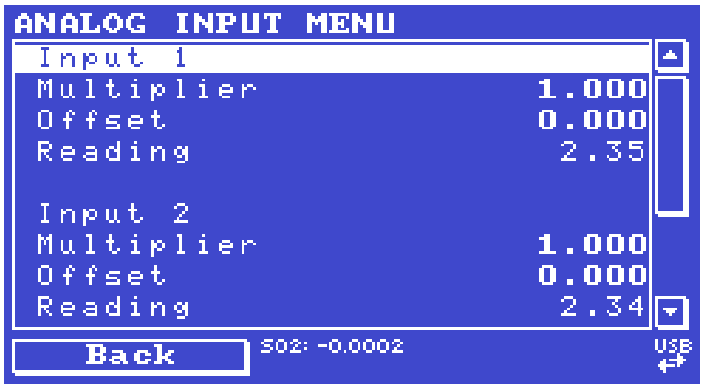

Figure 65 – Analog Input Menu Screen

Input 1/2/3	The sections below are repeated for each analog input.
Multiplier	The input voltage will be multiplied by this number. For example, if a sensor has a 0 - 5 V output for a temperature of -40 °C to 60 °C, the multiplier would be (60 - (-40))/5 = 20.
Offset	This value will be added to the above calculation. Continuing the example in the multiplier description, the offset should be set to -40, so that a voltage of 0 V will be recorded as -40 °C.
Reading	The current reading from the analog input, after the multiplier and offset are applied. This is the value that is logged or reported as parameter 199 - 201.

3.4.26 Analog Output Menu

Main Menu → Communications Menu → Analog Output Menu

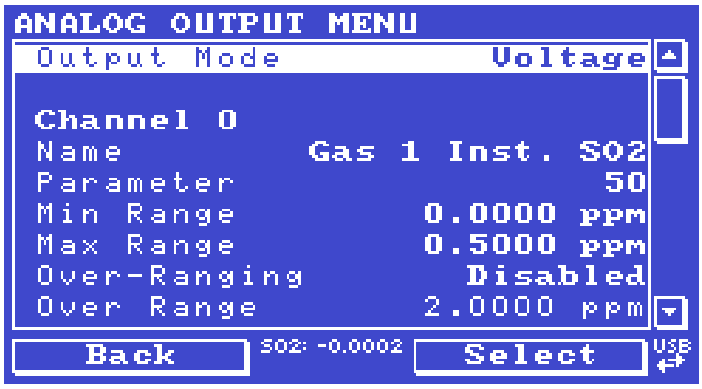

Figure 66 – Analog Output Menu Screen

Output Mode	The analog output can be set to be either **Current** or **Voltage**. Different fields will be displayed depending on which analog output type is selected.
Channel 0/1/2	Channel 0 as default will be setup to be Parameter 50, which is primary gas instantaneous reading. All three channels can be user defined to any of the available parameters (for a list of parameters refer to Table 47). All the labels below are repeated for each Channel.
Name	Text list of the parameter defined to output through the analog output (for a list of parameters refer to Table 47).
Parameter	Numeric list of the parameter defined to output through the analog output. This is a quicker way to enter parameters (for a list of parameters refer to Table 47).
Min Range	Set the lower range limit (in concentration units). This is the value at which the analog output should be at its minimum. For example, 4 mA for a 4 - 20 mA current output.
Max Range	Set the upper range limit (in concentration units). This value can be edited but cannot exceed the **Over-Range** value. This is the value at which the analog output should be at its maximum. For example, 20 mA for a current output.
Over-Ranging	Set to Enabled or Disabled to turn the over-ranging feature ON or OFF.
Over-Range	This field is only editable when **Over-Ranging** is set to **Enabled**. Set to the desired over range value. This value cannot be set below the **Max Range** value. This is the alternate scale the used for the analog output when over-ranging is active and enabled. When 90% of the standard range is reached, this over range is automatically entered. When 80% of the original range is reached, it returns to the original range.
Hold for Cal.	When **Enabled**, putting the instrument into any calibration state other than MEASURE will cause it to continue reporting the last reported value.

3.4.26.1 Analog Output Menu - Voltage

Main Menu → Communications Menu → Analog Output Menu

These items appear when **Output Mode** is set to **Voltage**.

Voltage Offset	Choices are **0 V**, **0.25 V** or **0.5 V**. This offsets the voltage for a concentration reading of 0. Since the output cannot go negative, this offset can be used to record negative readings.
0.5V Calibration	Enables the user to calibrate the analog voltage output at a low point. Edit the value against a reference volt meter until the connected equipment reads 0.5 V (refer to Section 4.4.1.1).
5.0V Calibration	Enables the user to calibrate the voltage output at a full scale point (5 V). Edit the value against a reference volt meter until the connected equipment reads 5 V (refer to Section 4.4.1.1).

3.4.26.2 Analog Output Menu - Current

Main Menu → Communications Menu → Analog Output Menu

These items appear when **Output Mode** is set to **Current**.

Current Range	Enables the user to set their desired current range. The user's choices are **0 - 20 mA**, **2 - 20 mA** or **4 - 20 mA**.
4mA Calibration	Enables the user to calibrate the current output at a low point. Edit the value against a reference amp meter until the connected equipment reads 4 mA (refer to Section 4.4.1.2).
20mA Calibration	Enables the user to calibrate the current output at a full scale point (20 mA). Edit the value against a reference volt meter until the connected equipment reads 20 mA (refer to Section 4.4.1.2).

3.4.27 Digital Input Menu

Main Menu → Communications Menu → Digital Input Menu

This menu is used to remotely trigger zero and span calibrations. This is done by assigning the eight digital inputs with one of the following commands.

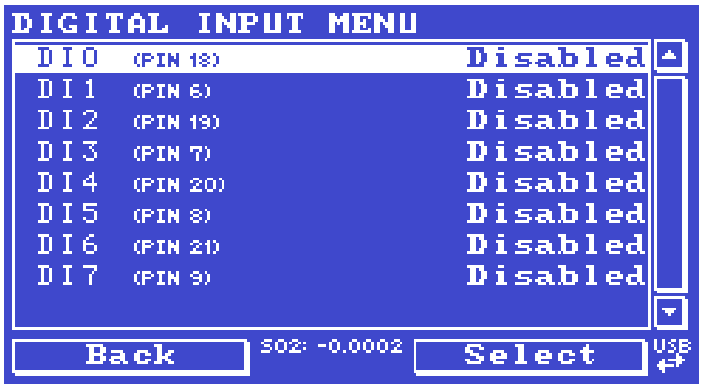

Figure 67 – Digital Input Menu Screen

DI N (Pin X)	Associates an action with a digital input. There are eight digital inputs (the pin numbers are for the 25 pin connector). Each one can have one of the following associated actions, triggered when the corresponding digital input goes to the **Active** state: ▪ **Disabled:** No action (this digital input does nothing). ▪ **Do Span:** Used to perform a span precision check. When activated the instrument sets the **Cal. Mode** to **Span** (refer to Section 3.4.10.1). ▪ **Do Zero:** Used to perform a zero precision check. When activated the instrument sets the **Cal. Mode** to **Zero** (refer to Section 3.4.10.1).
Active	Each pin can be set to be active **High** or **Low**. Active High means that the event will be triggered when the line is pulled to 5 V. Active Low means that the event will be triggered when the line is pulled to 0 V.

Example

Here is a typical configuration between an instrument and either a data logger or calibrator (master device):

1. Set the jumper JP1 to 5 V position (refer to Section 4.4.3).
2. Connect one of the master devices digital output signals to pin 18 and the ground signal to pin 5 of the instrument's analog/digital 25 pin female connector (refer to Figure 84).
3. Program master device to output 0 volts to pin 18 when a span is desired.
4. In the instrument's **Digital Input Menu** assign **DI 0 → Do Span** - Accept.
5. The same procedure can be followed to also activate zero calibrations. Pin 6 of the instrument's analog/digital 25 pin female connector can be connected to one of the other master devices digital outputs and the instrument can be set so **DI 1** is assigned to **Do Zero**.

3.4.28 Digital Output Menu

Main Menu → Communications Menu → Digital Output Menu

This allows the instrument to trigger external alarms in response to certain events. There are eight different pins available, which will be set high during an associated event:



Figure 68 – Digital Output Menu Screen

DO N (Pin X)	Associates a state with a digital output. There are eight digital outputs (the pin numbers are for the 25 pin connector). Each one can have one of the associated states listed in Table 5. The pin will be driven to the active state while the instrument state is true.
Active	Each pin can be set to be active **High** or **Low**. Active High means that the pin will be pulled to 5 V when the associated event occurs. Active Low means the pin will be pulled to 0 V when the associated event occurs.

Table 5 – Digital Output States

Digital Output State	Description
Disabled	No state (this state is never **Active**).
High Volt. Fail	High voltage fault.
Pwr Supply Fail	Power supply fault.
Ref Volt. Fail	Reference voltage fault.
A2D Fail	Analog to digital fault.
Lamp Fail	Lamp fault
Flow Fail	Sample flow fault.
Cell Heat Fail	Cell heater fault.
Flow Heat Fail	Flow block heater fault.
Lamp Heat Fail	Lamp heater fault.
Chassis Tmp Fail	Chassis temperature fault.
Cooler Fail	Cooler temperature fault.

Digital Output State	Description
USB Disconnected	The USB memory stick is disconnected.
Background	Performing a background.
Span	Performing a span check.
Zero	Performing a zero check.
System Fault	Any system fault (the red light is ON).
Maintenance Mode	User has activated maintenance mode.
Over Range AO 0	Over range for the analog output when channel 0 is active.
Over Range AO 1	Over range for the analog output when channel 1 is active.
Over Range AO 2	Over range for the analog output when channel 2 is active.

3.4.29 Network Menu (Optional)

Main Menu → Communications Menu → Network Menu

The **Network Menu** only appears when the **Network Port** is enabled in the **Hardware Menu** (refer to Section 3.4.34). The **Network Menu** allows the user to view or set the IP Address, Netmask and Gateway if the optional network port is installed.



Figure 69 – Network Menu Screen

Start-up Mode	The following modes are available: **Normal**: In this mode nothing is done with the network port during boot-up. It is assumed to be configured correctly or unused. **Read IP**: This mode interrogates the network port for its IP address. The menu will display the network address after boot-up. **Set IP**: The user may enter an IP address, Netmask and Gateway address (following the usual rules for formatting these addresses). At this time the instrument does not validate the correctness of these entries. When you cycle power, the instrument will first instruct the network port on its new address. It will switch to **Read IP** mode and read back the address it just set so the user may verify it in the menu.

	Set DHCP: This sets the network port into DHCP mode, allowing the network to assign the instrument an IP address.
IP Address **[Read IP or Set IP Start-up Mode]**	This is the current IP address of the instrument.
Netmask **[Read IP or Set IP Start-up Mode]**	This is the subnet mask of the network the instrument is connected to.
Gateway **[Read IP or Set IP Start-up Mode]**	This is the IP address of the router to access addresses not on the same subnet.
ID **[Set DHCP Start-up Mode]**	This is the ID of the instrument. Use the keypad to edit this field. The default ID setting is **Serinus**(**Ecotech ID**). The word **Serinus** is always the first part of the name and cannot be edited. The second part is the **Ecotech ID**.
Adaptor is in DHCP mode **[Set DHCP Start-up Mode]**	In this mode the instrument will ask for its network parameters from a DHCP server on your network.
Protocol	Sets the protocol used for the network port (**Advanced**, **ModBus**, **EC9800** or **Bayern-Hessen**). This must be set to **Advanced** for Acoem Australasia supplied software.
Endian **[Modbus Protocol]**	Select **Little** or **Big** endian mode for ModBus protocol.
Bayern-Hessen ID **[Bayern-Hessen Protocol]**	This is the Bayern-Hessen ID used by the Bayern-Hessen Protocol.
SO2 ID **[Bayern-Hessen Protocol]**	This is the ID of the SO_2 gas used by the Bayern-Hessen Protocol.

To read the IP address, refer to Section 4.3.1.

To set the IP address, refer to Section 4.3.2.

3.4.30 Bluetooth Menu

Main Menu → Communications Menu → Bluetooth Menu

This instrument supports Bluetooth communication through the Serinus Remote Android Application (refer to Section 4.7).



Figure 70 – Bluetooth Menu Screen

Bluetooth	This field indicates whether the instrument is remotely connected to an Android device.
Reset	After changing the ID or PIN, it is necessary to reboot the Bluetooth module. This is done by resetting the instrument or by using this menu item to reboot only the Bluetooth.
ID	This is the Bluetooth ID of the instrument. Use the keypad to edit this field. The default ID setting is **Serinus**(**Ecotech ID**). The word **Serinus** is always the first part of the name and cannot be edited. The second part is the **Ecotech ID**.

3.4.31 Trend Display Menu

Main Menu → Trend Display Menu

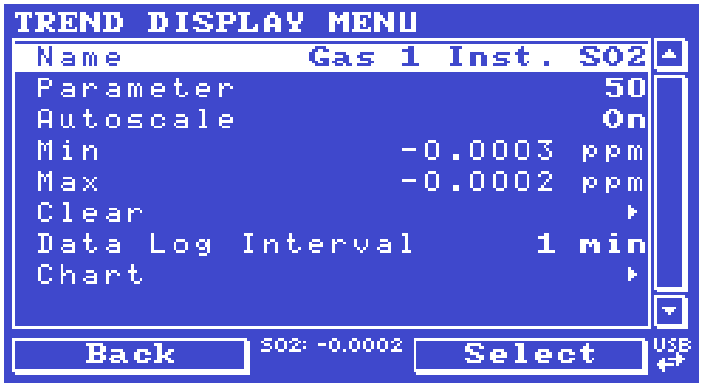

Figure 71 – Trend Display Menu Screen

Name	Displays the name of the **Parameter** the user has selected.

Parameter	Allows the user to select any loggable (refer to Table 47) parameter to graph on the trend display.
Autoscale	**Autoscale** can be **ON** or **OFF**. When it is "**ON**" the parameter will be scaled automatically for user convenience based on the current values logged.
Min	This is the minimum scale of the chart as defined by the **Autoscale** or the user.
Max	This is the maximum scale of the chart as defined by the **Autoscale** or the user.
Clear	Clears the current data points in the Chart.
Data Log Interval	The data log interval can be user set from **1 sec** interval up to **24 hours**.
Chart	This field enters a screen with a graph of the user selected **Parameter** (refer to Section 3.4.32).

3.4.32 Chart

Main Menu → Trend Display Menu → Chart

The chart allows the user to select a parameter and view it in a real time chart. The user can select from any loggable parameter (refer to Table 47). Changing the logged parameter will reset the chart. Pressing the Up or Down buttons will change between the selected parameter and the instantaneous SO_2 gas value. Changing the Data Log Interval resets all charts.

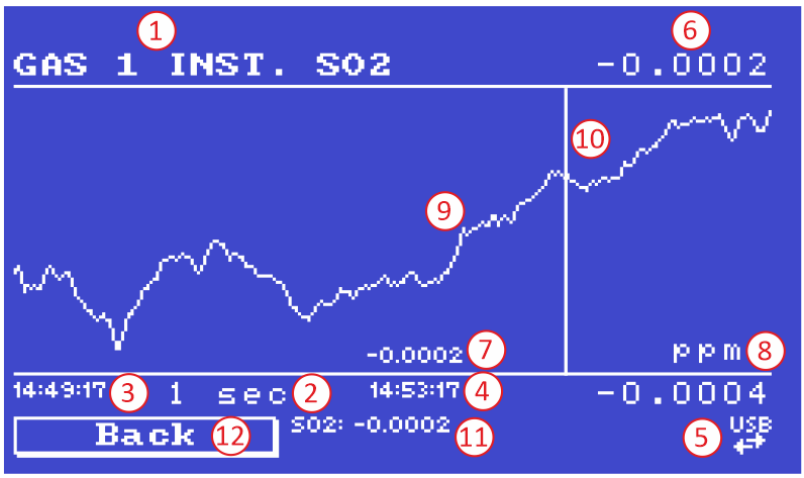

Figure 72 – Chart Screen

Chart Title (1)

Displays the name of the parameter as it would be displayed on the advanced protocol parameter list.

Data Log Interval (2)

Displays the value of the data logging interval as determined by the user in the Trend Display Menu (refer to Section 3.4.31).

Chart X-Axis (3 & 4)

(3) Displays the time stamp for the oldest data point (left hand side).

(4) Displays the time stamp for the newest data point (right hand side) or if the cursor is active it displays the current cursor data point time stamp.

Chart Y-Axis (5 & 6)

(5) This is the minimum scale as defined by the autoscale or the user (refer to Section 3.4.31).

(6) This is the maximum scale as defined by the autoscale or the user (refer to Section 3.4.31).

Current Data Point Value (7)

Displays the current value of the newest data point unless the **cursor** is active then is displays the current cursor data point value.

Units (8)

Displays the units of measure for the parameter that the user has selected.

Data Points (9)

Displays the last 240 data points recorded for the selected parameter.

Chart Cursor (10)

If the user wishes to know the value at any at a particular data point on the chart, the cursor can be used. The cursor is activated by pressing the (-) key on the keypad and is represented by a vertical line on the chart. The cursor can be moved left or right by the (-) or (+) key respectively. This cursor location now represents the current data point value of interest. The cursor will stay with the chosen data point and move with the updating chart. When the cursor finally hits the end of the chart it deactivates and the current data point value will now be the latest data point entering the chart.

Mode (11)

This field indicates the SO_2 concentration being measured in real-time.

Back (12)

Pressing back allows the user to access other menu items while the chart is still logging in the background.

Digital Output State	Description
Left Selection Button	Returns the user back to the trend display menu.
Scrolling Buttons	Using the scrolling buttons will cycle through the user selected parameter as well as any default gas(es) currently logging.
- Button	Pressing the (-) button will bring up the cursor and move it to the left.

Digital Output State	Description
+ Button	Pressing the (+) button will move the cursor to the right. When the cursor moves all the way to the right due to the chart moving it will deactivate.

3.4.33 Advanced Menu

This menu is accessed via a different method than the other menus. From the **Home Screen** press the following keys: 

This menu contains technical settings, diagnostics and factory hardware installations. No items in this menu should be accessed without authorisation and supervision of qualified service personnel.



Figure 73 – Advanced Menu Screen

Language	Select a language.
Hardware Menu	Refer to Section 3.4.34.
Service Displays	When set to **On**, new items appear on many different menus. These fields are for diagnostic and service personnel only. Default is **Off**.
Next Service Due	Enables the user to edit the next service due date.
Jump to Next State	Moves the sequence to the next state (e.g. from Fill to Measure). This command is most commonly used to force an instrument out of the warm-up sequence early.
Parameter Display Menu	Refer to Section 3.4.35.
Reset to Factory Defaults	Reset the configuration to factory defaults. This will erase all calibrations and user configuration information.
Rebuild Index	If a data log becomes corrupted it may be possible to restore It by rebuilding its index file. This command will ask the user to specify a month and will rebuild the index for that month. This operation can take many minutes and it should not be interrupted. While the file is rebuilding any data logging will be suspended.



CAUTION

No items in this menu should be accessed without authorization and supervision of qualified service personnel.

3.4.34 Hardware Menu

Advanced Menu → Hardware Menu

This menu contains factory hardware installations. If the user reset to factory defaults, then they may need to revisit this menu to enable their installed optional features.



Figure 74 – Hardware Menu Screen

Model	Select the instrument model. Normally this only needs to be reset when the configuration is corrupted. The selections available will depend on licensing. It is not recommended to run an instrument with firmware set to an incorrect model.
Front Panel Style	Choosing the incorrect front panel will result in the traffic lights behaving inconsistently. Default is **Aluminium**.
Network Port	When **Enabled** indicates the instrument has a network port installed. Default is **Disabled**.
Orifice Size **[Internal Pump Disabled]**	Specify the input orifice for instruments without an internal pump. Default is **0.75**.
Internal Pump	When **Enabled** indicates the instrument has an Internal pump installed. Default is **Disabled**.
Optical Test Lamp	Allows optical diagnostic tests. Default is **Disabled**.
IZS Internal Span	When Enabled indicates the IZS option is installed.
Perm Rate **[IZS Internal Span Enabled]**	User should enter the value as found on the permeation tube specification sheet.
Perm Flow **[IZS Internal Span Enabled]**	Total flow past the permeation chamber during an activated internal span mode.
Perm Tube Oven **[IZS Internal Span Enabled]**	Set target temperature for the permeation oven. User definable range from 47 - 53 °C. Default is 50 °C.
SO2 Lamp Target	Allows the user to adjust the lamp current target. The default is 35 mA.
HV Target	Set target voltage for the high voltage power supply. User definable range from 400 - 800 V. Default is 700 V.

External Bkgnds	When **Enabled** the system will not perform automatic backgrounds and it will not warn the user that it is not doing backgrounds. Rather it is the responsibility of the operator to remotely trigger the backgrounds. Default is **Disabled**.

CAUTION

No items in this menu should be accessed without authorization and supervision of qualified service personnel.

3.4.35 Parameter Display Menu

Advanced Menu → Parameter Display Menu

Used to display a logged parameter on the screen (refer to Table 47 for a list of parameters).

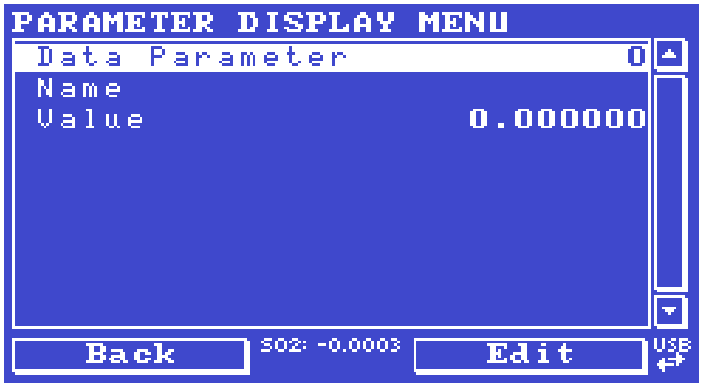

Figure 75 – Parameter Display Menu Screen

Data Parameter	This is an editable field. Enter the parameter number the user wishes to view (refer to Table 47).
Name	Displays the name of the selected parameter.
Value	Displays the current value of the selected parameter.

This page is intentionally blank.

4. Communications

The Serinus has a number of different interfaces for communication with other equipment (RS232, USB, 25 pin digital/analog input/output, TCP/IP network (optional) and Bluetooth). A demonstration version of Acoem Australasia's **Airodis** software is included with the instrument, enabling basic data downloads and remote operation from a PC running a supported MS Windows operating system. The full version of Airodis is available separately and includes automated data collection, data validation and complex reporting by multiple users. Refer to the Airodis Manual and Section 4.6 of this manual for details on setting up and communicating with the instrument.

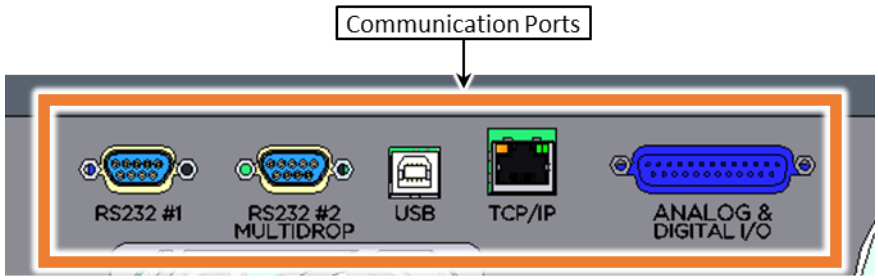

Figure 76 – Communication Ports

4.1 RS232 Communication

RS232 communication is a very reliable way to access data from the instrument and is recommended for use in connection to a data logger for 24/7 communication. Both RS232 ports are configured as DCE and can be connected to DTE (Data Terminal Equipment such as a data logger or computer).

Port #2 also supports a multidrop arrangement (a configuration of multiple instruments connected via the same RS232 cable where the transmit signal is only asserted by the instrument that is spoken to).

For reliable multidrop RS232 communications follow these guidelines:

- Verify that the Serial ID is set to a unique value which is different to the other instruments in the chain (refer to Section 3.4.24).
- All of the instruments in the multidrop chain must have the same baud rate and communication protocol settings. A maximum of 9600 baud rate is recommended.
- The multidrop RS232 cable should be kept to less than three meters in length.
- A 12K ohm terminating resistor should be placed on the last connector of the cable (connect from pin 2 to pin 5 and from pin 3 to pin 5 - refer to Figure 77).
- The shielding of the multidrop cable must be continuous throughout the cable.
- The shielding of the multidrop cable must only be terminated at one end. It should be connected to the metal shell of the DB 9 way connector.

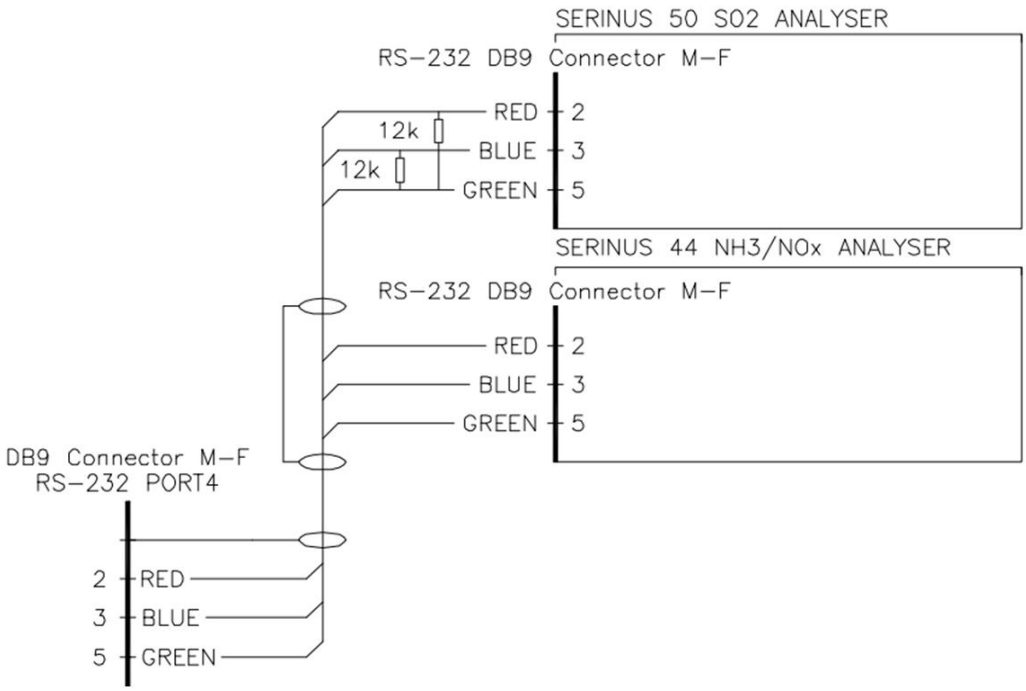

Figure 77 – Multidrop RS232 Cable Example

4.2 USB Communication

This is ideal for irregular connection to a laptop running Acoem Australasia's Airodis software to download logged data and remotely control the instrument. Due to the nature of USB, this is a less reliable permanent connection as external electrical noise can cause USB disconnection errors on a data logger.

For more information on regarding connecting over USB, making connections refer to Section 4.6.1.1.

Note: Only the Advanced protocol is supported for USB communication.

4.3 TCP/IP Network Communication (Optional)

Instruments with the optional network port installed can be accessed using a TCP/IP connection. Figure 78 shows examples of some possible configurations for remote access.

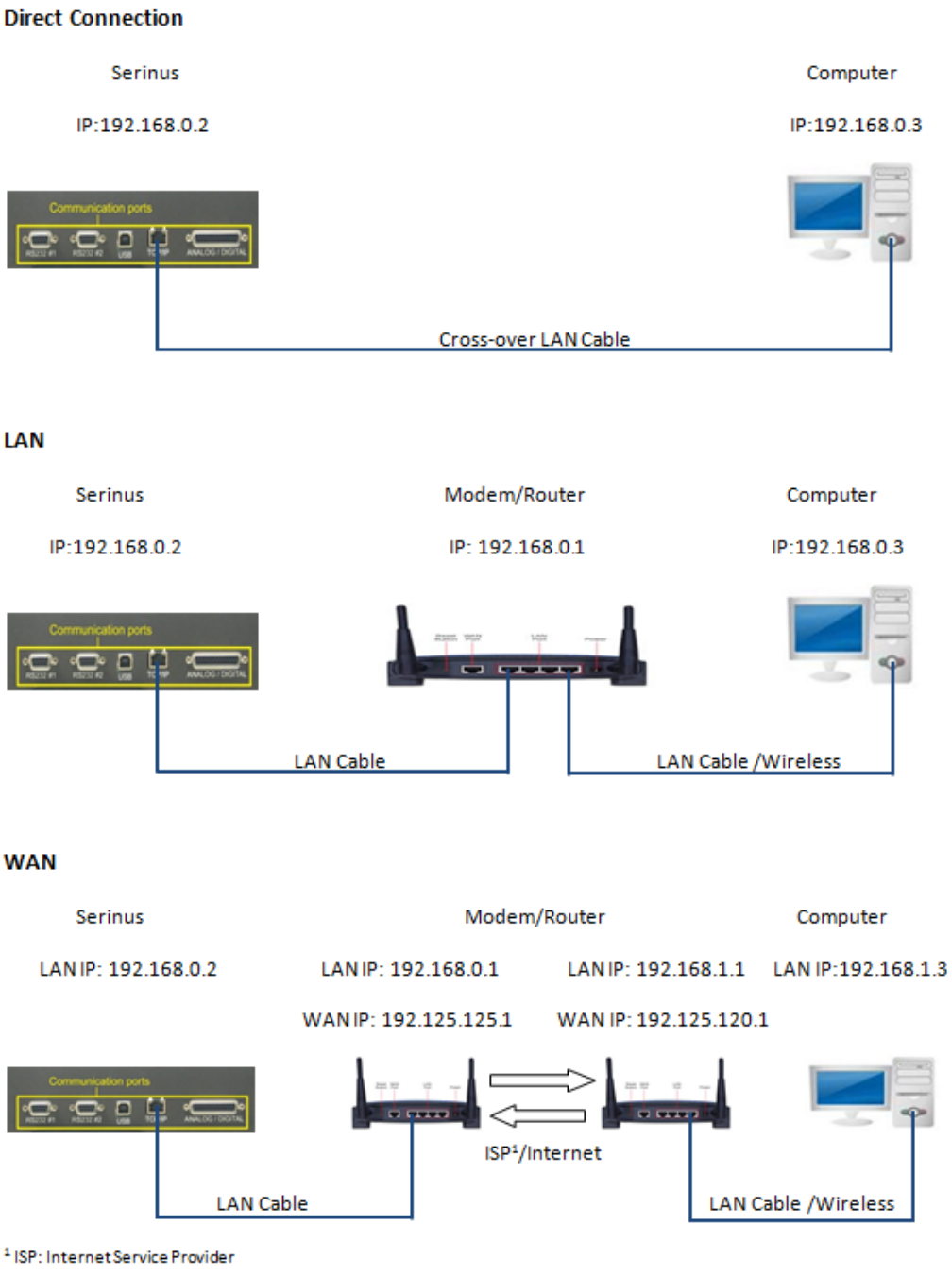

Figure 78 – Example of Typical Network Setups

Note: In Figure 78 all the IP addresses are taken as an example. The WAN IP addresses are normally provided by your ISP. Whereas, the LAN IP addresses can be set manually to any range which is within the subnet of the Modem/Router/switch.

Use a cross-over LAN cable to connect the instrument directly to a computer, or a standard LAN cable for connection to a Modem/Router/Switch as shown in Figure 78. The computer could be connected to the Modem/Router using either CAT5 cable or a wireless connection, but the instrument must be connected using CAT5/6 cable.

4.3.1 Reading Network Port Setup

To read the current network port settings perform the following steps:

Procedure

1. Open - **Main Menu → Communications Menu → Network Menu**.
2. Select - **Start-up Mode → Read IP** - Accept.
3. Manually use the power switch on the rear of the instrument to turn the power OFF. Leave the instrument OFF for 10 seconds before turning the power back ON.
4. Open - **Main Menu → Communications Menu → Network Menu**.
5. The current network port settings will now be displayed on the screen.
6. When viewing is complete select - **Start-up Mode → Normal** - Accept.

4.3.2 Setting Network Port Setup

Below is an example of how to setup the network port:

Procedure

1. Open - **Main Menu → Communications Menu → Network Menu**.
2. Select - **Start-up Mode → Set IP** - Accept.
3. Edit - **IP Address** - (Change the IP address to the address you wish to use within the Modem/Router/Switch Subnet).
4. Edit - **Netmask** - (Change the Netmask to the setup specified by the Modem/Router).
5. Edit - **Gateway** - (Change the Gateway to the setup specified by the Modem/Router).
6. Select - **Protocol → Advanced** - Accept.

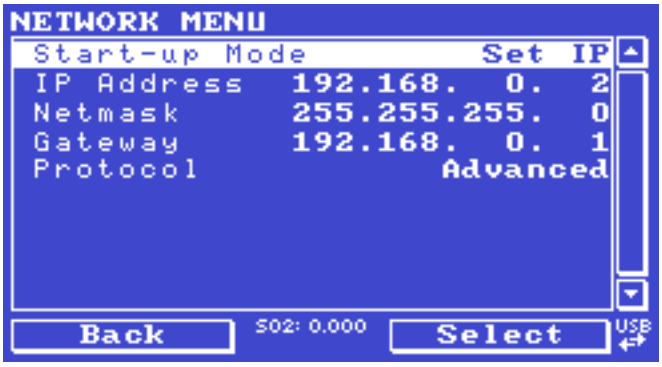

Figure 79 – Example of Network Menu Setup

7. Once completed, use the power switch on the rear of the instrument to turn the power OFF. Leave the instrument OFF for 10 seconds before turning the power back ON.

Note: Manually perform a hardware power cycle every time the IP address is changed for it to take effect.

8. Open - **Main Menu → Communications Menu → Network Menu**.
9. The **Start-up Mode** automatically changes to **Read IP** and the current network port settings will be displayed on the screen.
10. When viewing is complete select - **Start-up Mode → Normal** - Accept.

4.3.3 Port Forwarding on Remote Modem/Router Setup

When using the network port to connect to the router / modem with NAT enabled, the user will need to add IP mapping to ensure that data is forwarded through to the desired port. This is known as port forwarding. To set-up the port for the instrument, the user needs to go into the modem/router configuration. Normally, the user will see the port forwarding setup under Port Forwarding, NAT or Port Mapping menu. Below is an example port forwarding setup.

The default port for the Serinus range of instruments is **32783**. The destination address is the instrument IP address setup in the **Network Menu**.

Item	Protocol	Incoming Address	Incoming Port	Destination Address	Destination Port
1	tcp	0.0.0.0	32783 - 32783	192.168.0.2	32783 - 32783

Figure 80 – Port Forwarding Example

4.3.4 Setup Airodis to Communicate with Serinus

LAN

Below is an example of Airodis setup for a LAN network. Ensure the IP address is set to the same as on the instrument **Network Menu**.

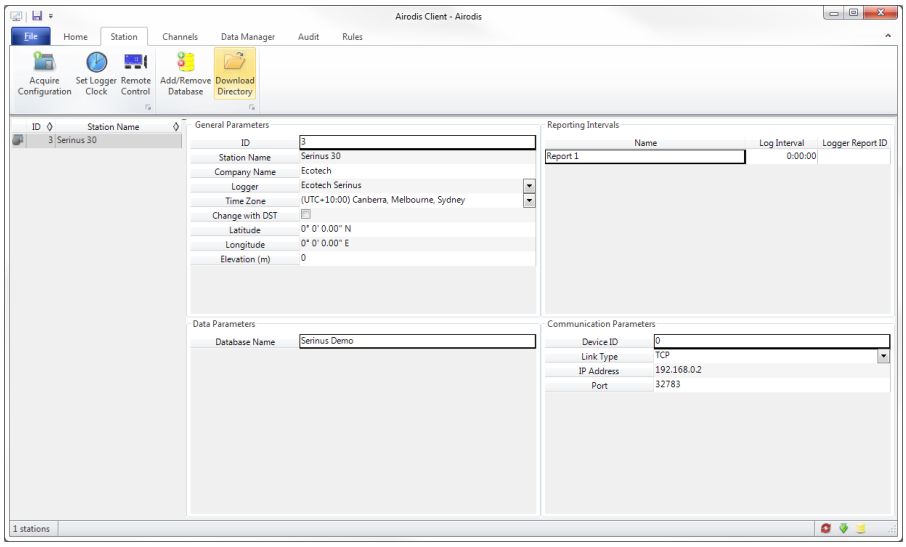

Figure 81 – LAN Network Set-Up (Airodis)

WAN

Below is an example of Airodis setup for a WAN network. Ensure the IP address is set the same as on the remote modem/router.

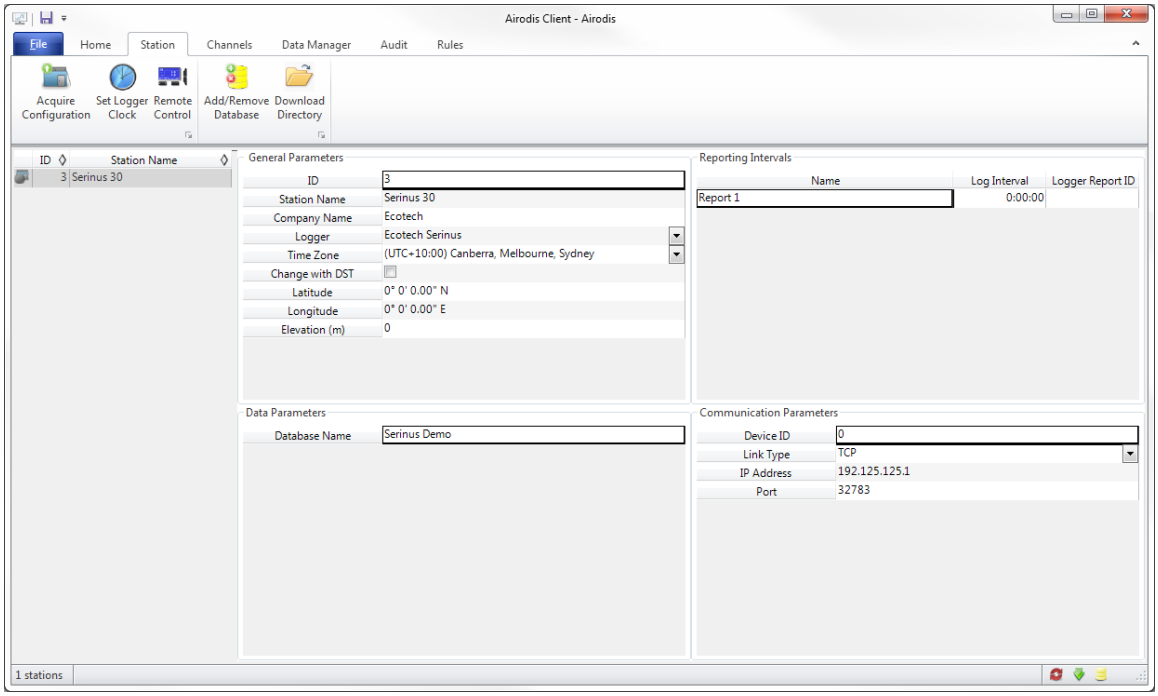

Figure 82 – WAN Network Set-Up (Airodis)

4.4 Analog and Digital Communication

The 25 Pin analog and digital I/O port on the rear panel of the instrument sends and receives analog and digital signals to other devices. These signals are commonly used to activate gas calibrators or for warning alarms.

4.4.1 Analog Outputs

The instrument is equipped with three analog outputs that can be set to provide either voltage (0 - 5, 0.25 - 5 or 0.5 - 5 V) or current (0 - 20, 2 - 20 or 4 - 20 mA) output. The analog outputs are tied to user selected parameters (refer to Table 47).

For 0 - 10 V analog output operation, set the output mode to current and move the jumpers (JP3) on the rear panel PCA to 0 - 10 V (refer to Figure 83). Ensure the Current Range is set to 0 - 20 mA to obtain the 0 - 10 V range. When calibrating the (current) analog output with the jumper set to 0 - 10 V, the 4 mA calibration target is now a 2 V target and 20 mA calibration target is now a 10 V target.

4.4.1.1 Analog Outputs Voltage Calibration

Equipment Required

- Multimeter (set to volts)
- Male 25 pin connector with cable

Procedure

1. Open - **Main Menu → Communications Menu → Analog Output Menu** (refer to Section 3.4.26).
2. Select - **Output Mode → Voltage**.
3. Connect a multimeter (using an appropriate adaptor or probes on the multimeter) to the ground (pin 24) and the relevant output pin (pin 10).
4. Edit - **0.5V Calibration** - (until the multimeter reads 0.500 V ± 0.002) - Accept.
5. Edit - **5.0V Calibration** - (until the multimeter reads 5.00 V ± 0.002) - Accept.

4.4.1.2 Analog Outputs Current Calibration

Equipment Required

- Multimeter (set to mA)
- Male 25 pin connector with cable

Procedure

1. Open - **Main Menu → Communications Menu → Analog Output Menu** (refer to Section 3.4.26).
2. Select - **Output Mode → Current**.
3. Connect a multimeter (using an appropriate adaptor or probes on the multimeter) to the ground (pin 24) and the relevant output pin (pin 10).
4. Edit - **4mA Calibration** - (until the multimeter reads 4 mA ± 0.01) - Accept.
5. Edit - **20mA Calibration** - (until the multimeter reads 20 mA ± 0.01) - Accept.

4.4.2 Analog Inputs

The instrument is also equipped with three analog inputs with resolution of 15 bits plus polarity, accepting a voltage between 0 - 5 V. These go directly to the microprocessor and should be protected to ensure static/high voltage does damage the main controller PCA (instrument warranty does not cover damage from external inputs).

4.4.3 Digital Status Inputs

The instrument is equipped with eight logic level inputs for the external control of the instrument such as Zero or Span sequences. Each input has a terminating resistor which can be either PULL UP or PULL DOWN. This is set using the jumper JP1 on the rear panel PCA (refer to Figure 83).

4.4.4 Digital Status Outputs

The instrument is equipped with eight open collector outputs which will convey instrument status condition warning alarms such as no flow, sample mode, etc. Two of the digital outputs can be set so that there is +5 V and +12 V available on the 25 pin connector for control purposes, instead of digital outputs 0 and 1.

In the default jumper locations (refer to Figure 83) these two outputs will function normally as open collector outputs. If moved to the position closer to the 25 pin connector then the DO 0 will supply +12 V and DO 1 will supply +5 V.

The +12 V and +5 V supplies are limited to about 100 mA each.

Each digital output is limited to a maximum of 400 mA. The total combined currents should not exceed 2 A.

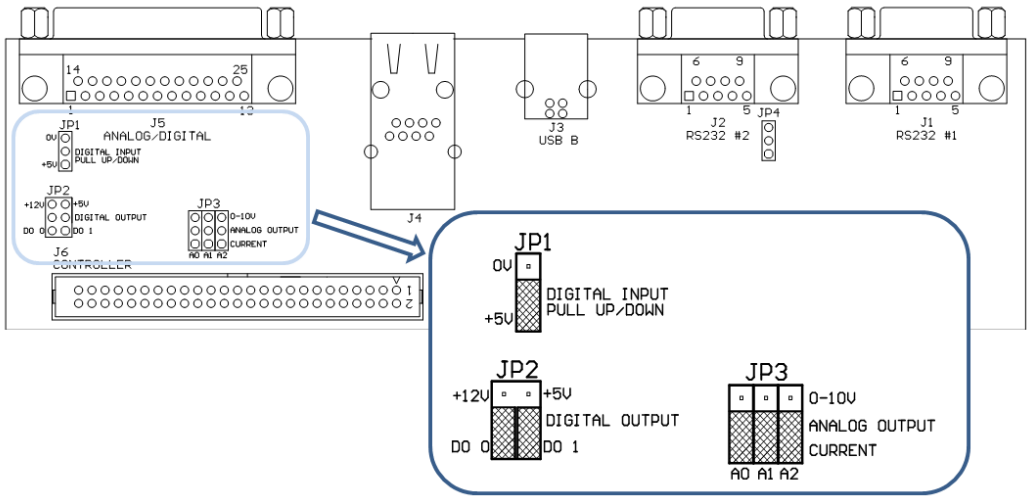

Figure 83 – Rear Panel PCA (Default Jumpers Highlighted)

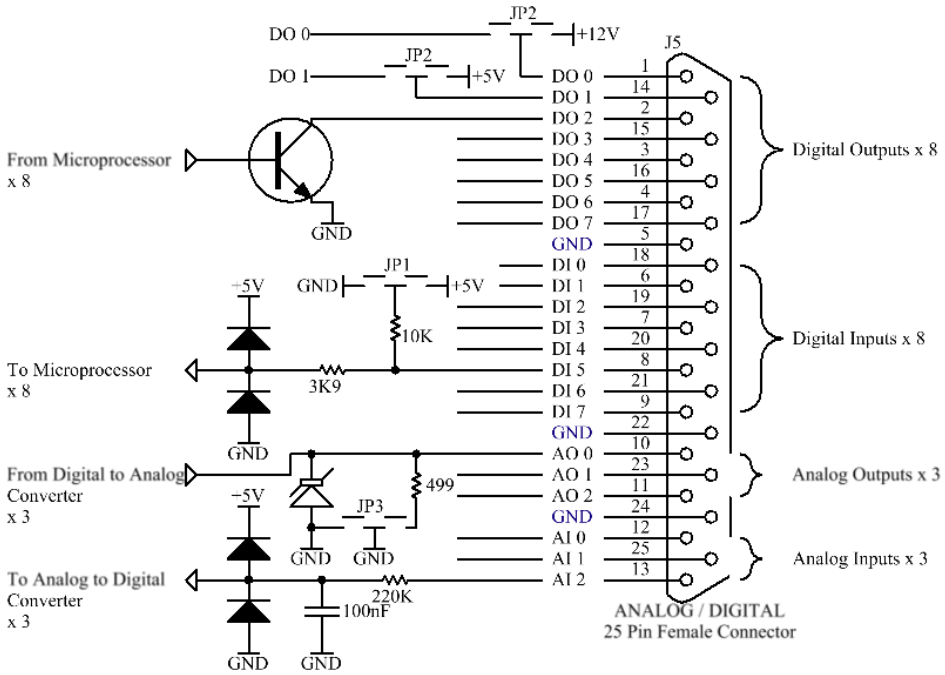

Figure 84 – Analog & Digital I/O Individual Pin Descriptions

CAUTION

The analog and digital inputs and outputs are rated to CAT I.

Exceeding 12 VDC or drawing greater than 400 mA on a single output or a total greater than 2 A across the eight outputs can permanently damage the instrument and void the warranty.

4.5 Logging Data

When the user receives the instrument from the factory it will have a default set of parameters already setup in the internal data logger. These select few parameters have been chosen for their relevance in assisting in troubleshooting the instrument.

4.5.1 Configure Instrument Internal Logging

In order to log data the user must first specify a data logging interval. This is how often data will be logged to the USB memory stick. It is possible to log a maximum of 12 parameters. These parameters can be selected by name or by parameter number using the parameter list as a reference (refer to Table 47).

4.5.1.1 Data Log Setup –Numeric

Procedure

1. Open - **Main Menu → Communications Menu → Data Logging Menu** (refer to Section 3.4.23).
2. Select - **Data Log Interval -** (adjust to the desired value) - Accept.
3. Open - **Data Log Setup –Numeric -** (select the storage location to edit).
4. Edit - (Change the value in the selected storage location “Parameter n” to the preferred parameter to be logged) - Accept.

4.5.1.2 Data Log –Text

Procedure

1. Open - **Main Menu → Communications Menu → Data Logging Menu** (refer to Section 3.4.23).
2. Select - **Data Log Interval -** (adjust to the desired value) - Accept.
3. Open - **Data Log Setup –Text -** (select the storage location).
4. Select - (Change the name in the selected storage location “Parameter n” to the preferred parameter to be logged) - Accept.

4.6 Using Airodis Software to Download Data

4.6.1 Connecting the Instrument to a PC

This instrument can communicate with a PC using RS-232 (Serial), TCP/IP (Network), Bluetooth or USB. Serial, Bluetooth and network communications do not require additional drivers. When using a USB connection, the driver must be installed first.

4.6.1.1 Connecting Over USB

Before connecting the USB cable form a PC to the instrument, the Serinus USB driver must be installed.

Power ON the instrument and connect it to a PC with a USB cable. The user should receive a prompt if the driver needs to be installed. If not, open Device Manager (Under “System” in Control Panel), find the device and select “Update Driver Software”.

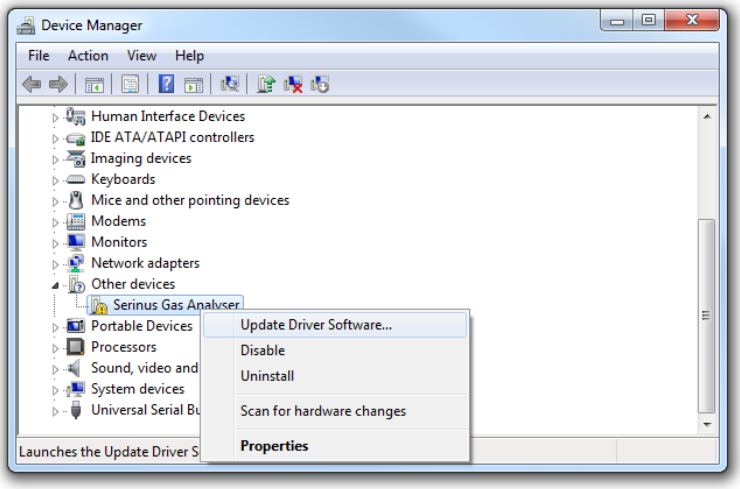

Figure 85 – Installing Driver Software (Device Manager)

When prompted where to search for the driver, select "**Browse my computer for driver software"**.

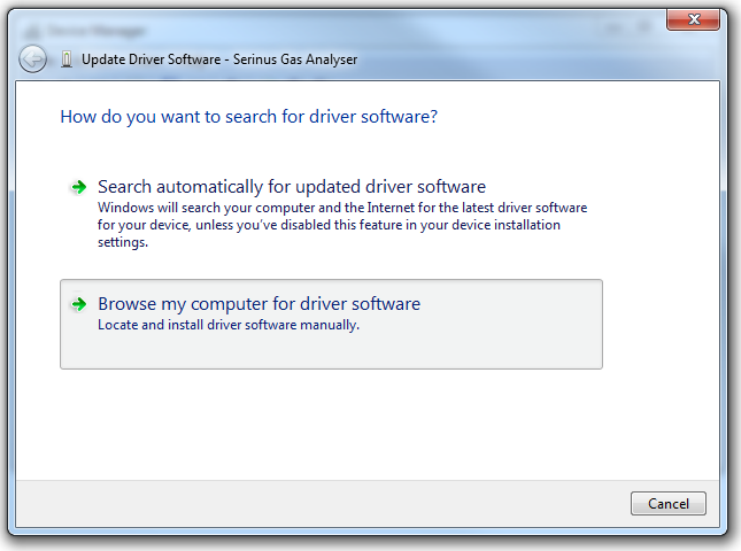

Figure 86 – Update Driver Popup

The Serinus USB driver is located on the green Ecotech resources USB stick under "\Drivers\Ecotech Analyser". Select this directory and click **Next**.

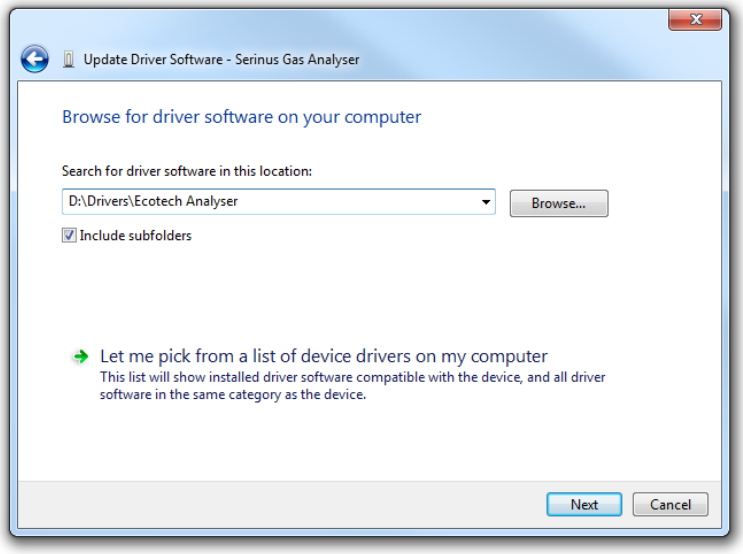

Figure 87 – Update Driver Popup (Directory Location)

If the user receives a confirmation prompt to install the driver, select **Install**.

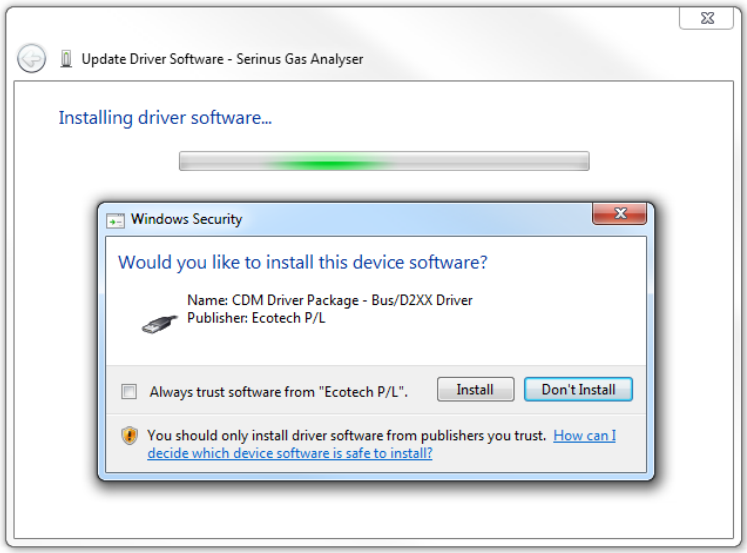

Figure 88 – Installing Driver Confirmation Prompt

If everything went smoothly, Windows will inform the user that the driver was successfully installed.

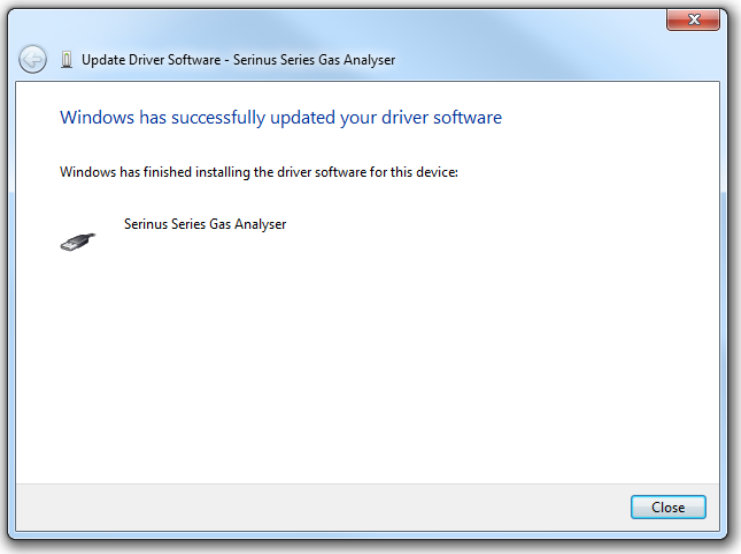

Figure 89 – Successful Driver Installation

4.6.1.2 Connecting Over Serial (RS-232)

The following steps outline how to setup the instrument for connection to a PC or datalogger (refer to Section 3.4.24):

Procedure

1. Open - **Main Menu → Communication Menu → Serial Communication Menu**.
2. Determine which RS232 Port the user is physically making the connection with. Remember, multidrop is only supported on RS232 #2.
3. Select - **Baudrate → 38400** - Accept (Set an appropriate baud rate, default is 38400).
4. Select - **Protocol → Advanced** - Accept.

If the user is running Airodis in a multidrop configuration, ensure that the **Serial ID** is unique for each instrument on the chain.

4.6.1.3 Connecting Over Network (TCP/IP)

Refer to Section 4.3.2 to setup the instrument for connection to a PC or datalogger using a static IP address.

4.6.2 Installing Airodis

The user can download data from the instrument using either a full retail (paid) version of Airodis or with the demo version which is included on the green Ecotech resources USB stick. The demo version has limited functionality, but will allow the user to download and export data from up to three instruments. If the user doesn't have Airodis Installed, they can obtain it from the following address:

http://www.airodis.com.au

The installer is straightforward: Ensure the user selects the correct version of software to install for their operating system. If they are running 64-bit windows, install the 64-bit (x64) version. Otherwise, install the 32-bit (x86) version.

4.6.3 Configuring Airodis

Procedure

1. Once installed, double click on the Airodis shortcut on the desktop to start Airodis Workspace Manager. The user will be presented with the default workspace options. These will suffice for downloading data from the instrument.

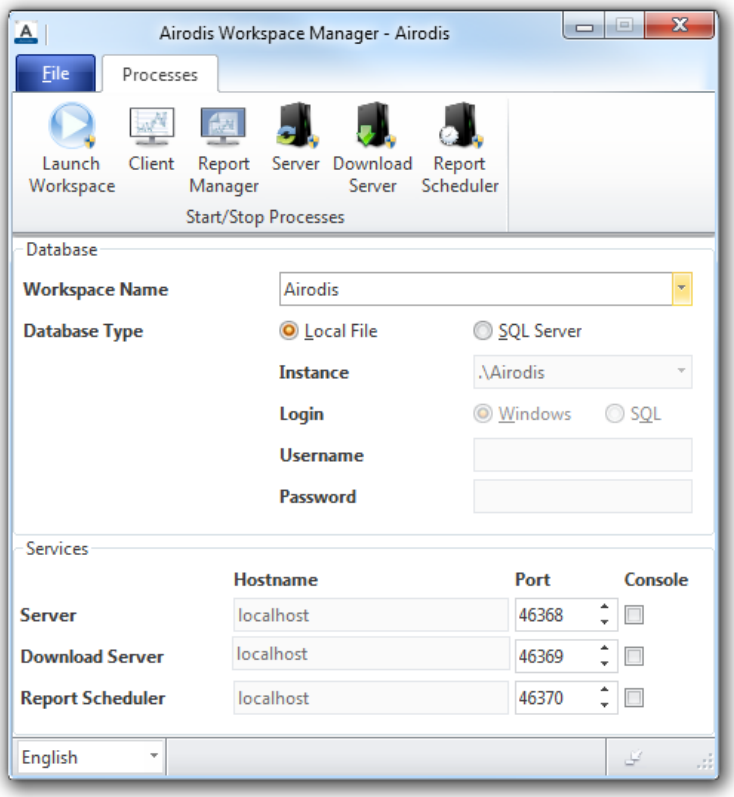

Figure 90 – Airodis Workspace Manager

2. Start the Client, Server and Download Server by single-clicking the toggle button for each. The client may prompt to register with Acoem Australasia or install an update. Follow the prompts if it does.

3. Once the Client application has loaded, click **Home→Add Station→New Physical Station.**

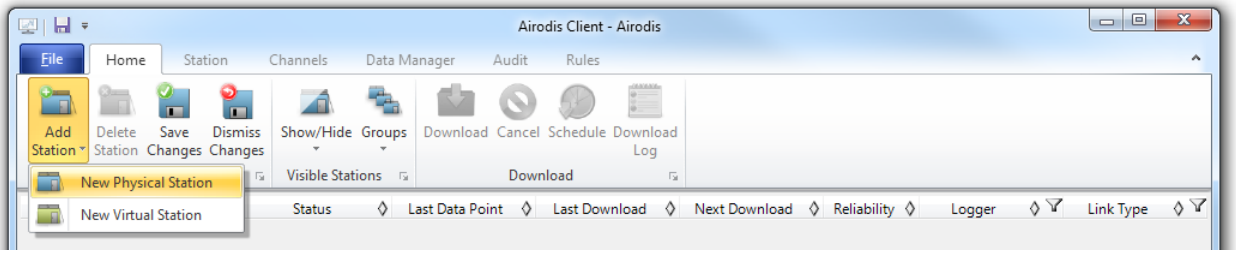

Figure 91 – Adding a New Station

4. This automatically brings the user to the **Station** tab on the ribbon. Enter the communication details to connect to the instrument.

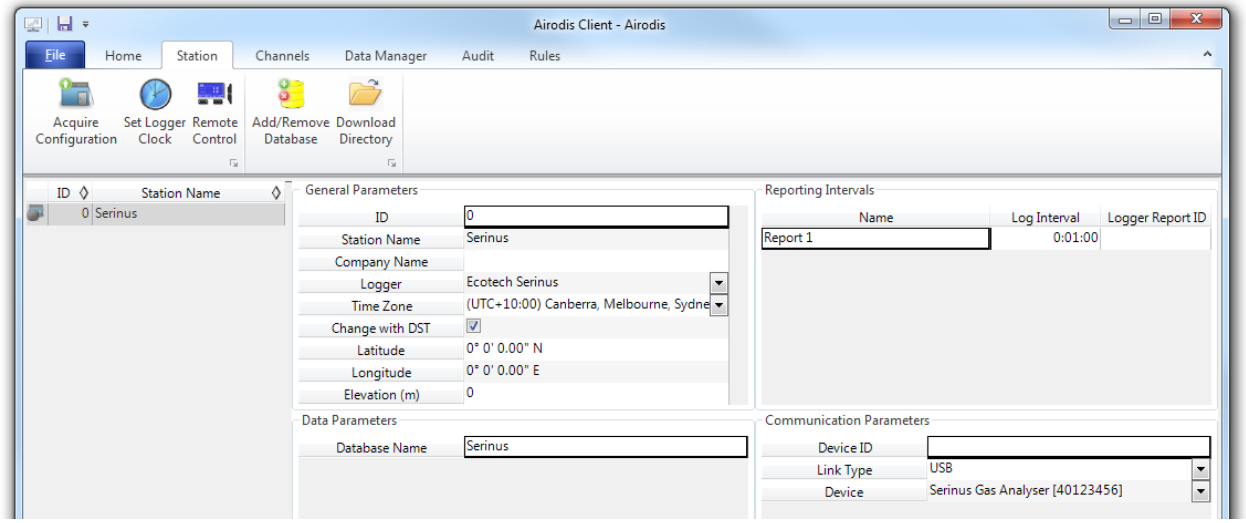

Figure 92 – New Station Connection

Table 6 – Setting up a New Station via Airodis

Property	Description
Station Name	The name of the station. If you have other loggers, the name is used to distinguish them.
Logger	Set this to “Ecotech Serinus” when downloading from any Serinus series instrument. This will communicate with the instrument via the **Advanced** protocol. If using a network or serial connection, ensure that the Advanced protocol has also been selected on the instrument itself.
Time Zone	Set this to the time zone that the instrument is located in.
DST	Enable this option if you plan on changing the clock on the instrument with daylight savings. Leave this disabled if the clock does not shift during DST. The instrument will need to be adjusted manually for DST - it will not happen automatically.
Database Name	This is the name to be used for the table in the SQL database containing this station’s data. It must be unique for each station.
Device ID	Enter the Serial ID of the instrument. If you are not using multidrop; this can be set to “0” or left blank.
Link Type	Select the type of connection used to connect to the instrument. Different properties will appear depending on the link type selected. Align these settings with those of the instrument.
Log Interval	This needs to be the same as the **Data Log Interval** setting on the instrument.

Note: The available fields for communication parameters will change when you change the link type. the user will need to set the communication parameters that have been defined on the instrument.

5. Once the station has been created, save the station by clicking the Save shortcut icon or **File→Save.**

6. Click Acquire Configuration. This will probe the instrument for a channel list. After a few seconds, the channel list should be visible in the Channels tab.

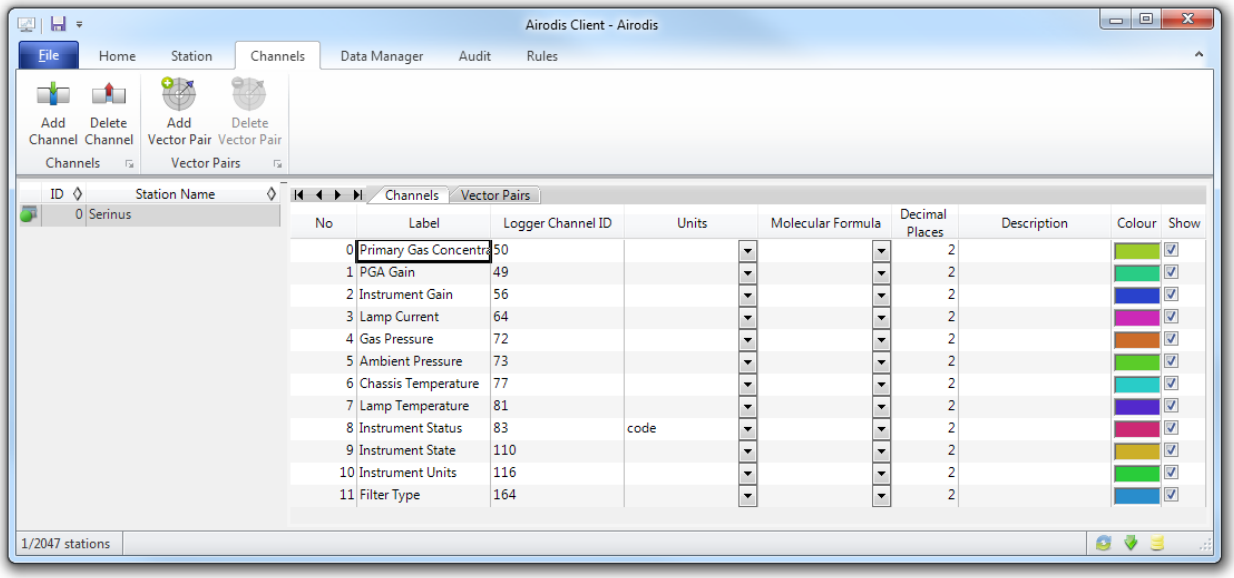

Figure 93 – Station Configuration (Channel List)

Note: If there was an error connecting to the instrument, a red dot will appear next to the station name in the station list (on the far left hand side). Hovering over the red dot will present the user with an error message (refer to Figure 94).

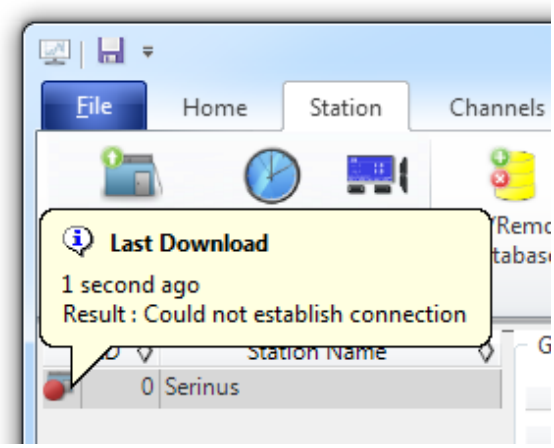

Figure 94 – Error Status Notification

7. Select the Data Manager tab, click download. The Download Data window will appear. Select the appropriate time period that the user wishes to download and click Download.

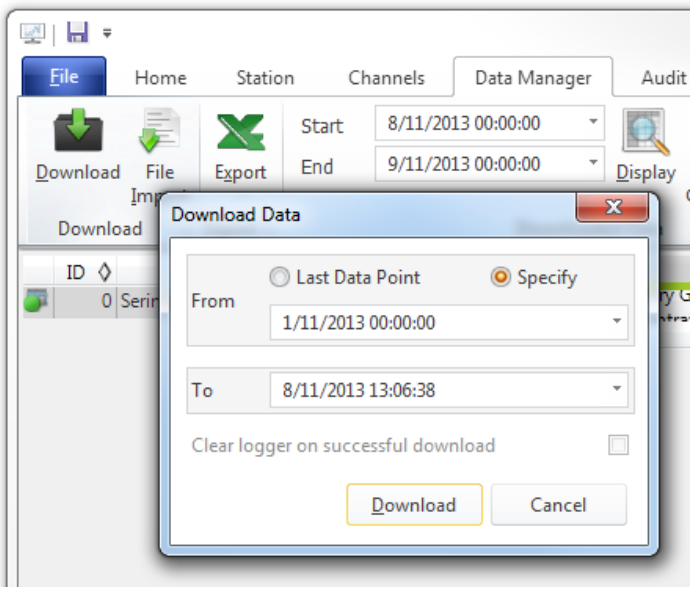

Figure 95 – Downloading Data

8. The status of the download will appear in the bottom-left corner of the window. The user can also monitor the status of the download from the Home tab.

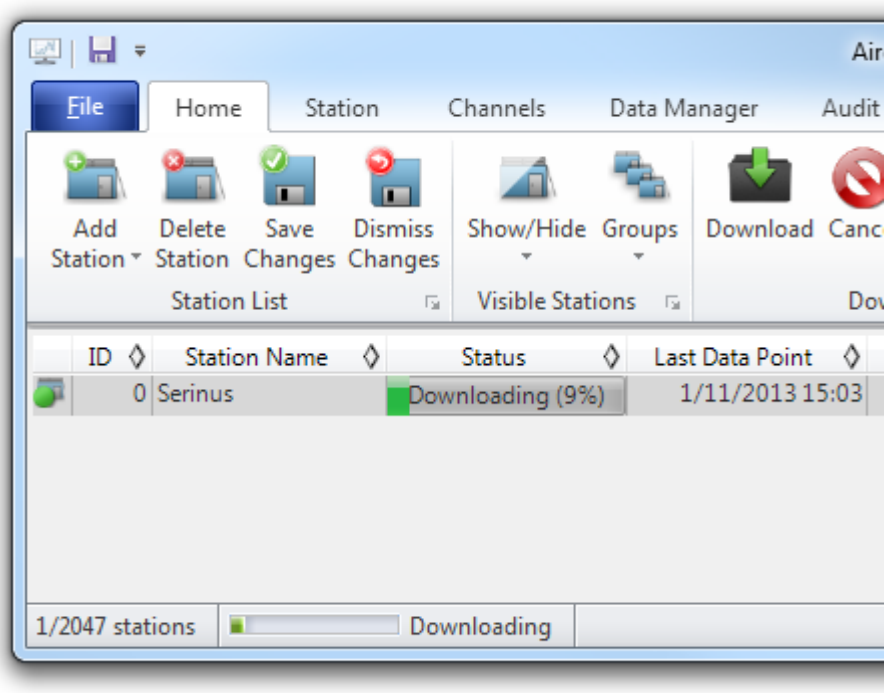

Figure 96 – Download Data Status

9. Data will become available in the data manager as it is downloaded. The user can load data for a date range by entering the start and end dates and clicking Display. The selected data will be loaded into the data manager.

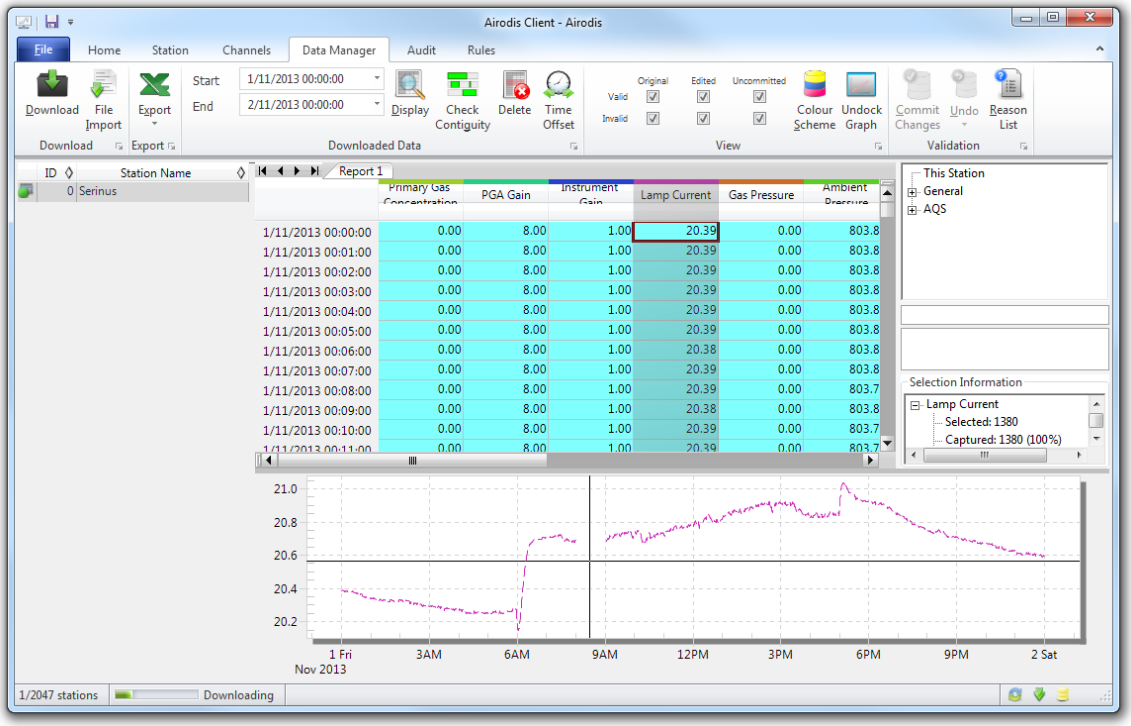

Figure 97 – Data Visibility

10. Data can be exported by clicking the Export function. This will allow the user to save their data in CSV format, which can be loaded into another program such as Microsoft Excel. It is also possible to copy/paste (Ctrl + C / Ctrl + V) data directly from the Airodis data manager.

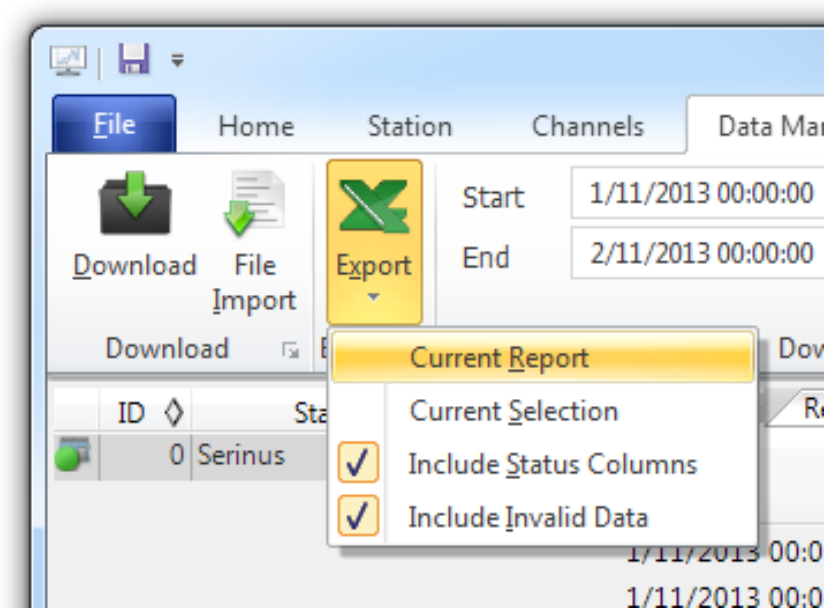

Figure 98 – Exporting Data

11. That's it! The data has been downloaded from the instrument and exported to a standard CSV file.

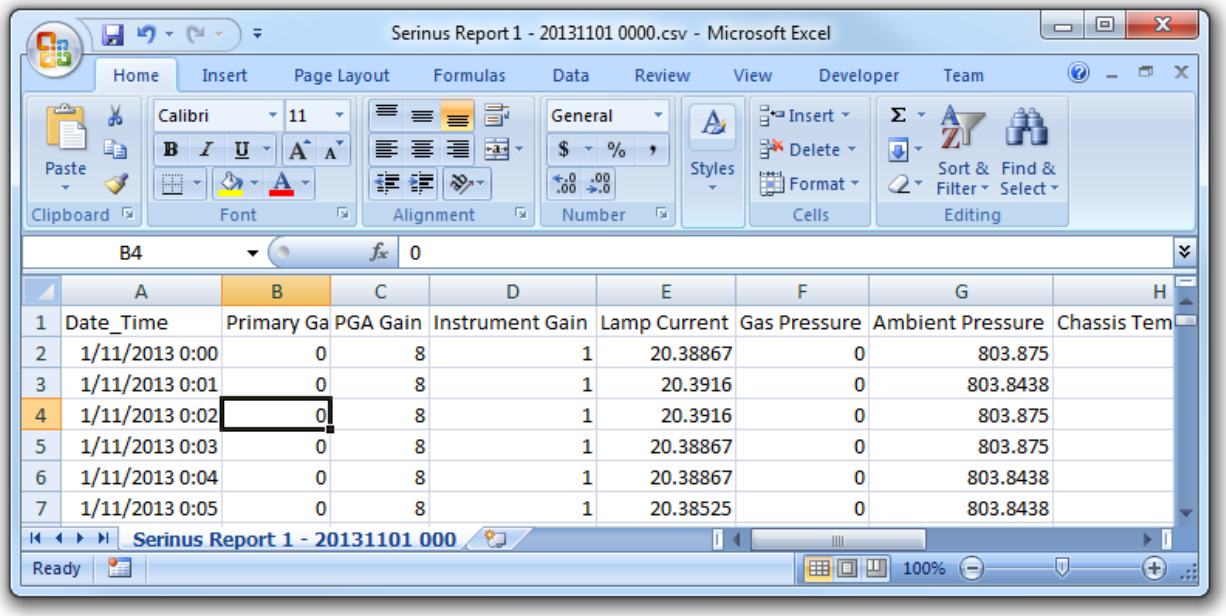

Figure 99 – Data Download Complete

4.7 Serinus Remote App/Bluetooth

The Serinus Remote Application allows for any Android device (Tablet or Smartphone) to connect to an instrument.

The Serinus Remote Application allows the user to:

- Completely control the instrument using a remote screen displayed on the device.
- Download logged data and take snapshots of all the instrument parameters.
- Construct graphs from logged data or real time measurements.

The following sections cover installation, connection and use of the application.

4.7.1 Installation

The Serinus Remote Application can be found in the Google Play Store by searching for Ecotech or Serinus. Once found, choose to **Install** the application and **Open** to start the application.

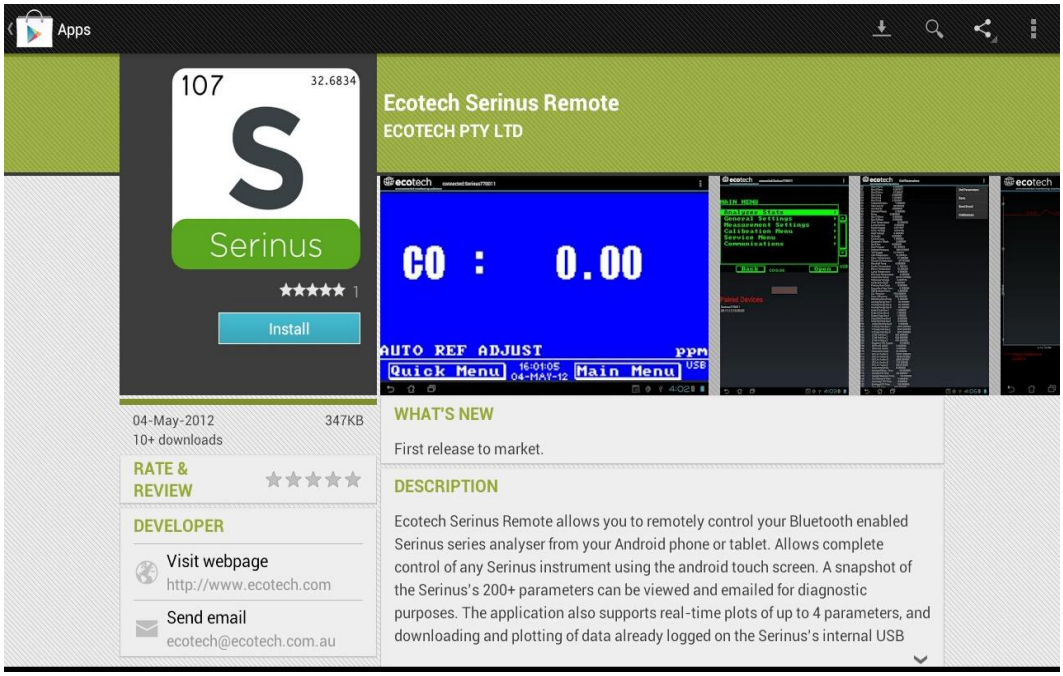

Figure 100 – Downloading the App from Google Play Store

Note: A menu containing additional features and functions can be accessed by entering the **Options Menu** (or similar) on your device. The location and format of this menu may vary.

4.7.2 Connecting to the Instrument

Procedure

1. Open - **Main Menu → Communications Menu → Bluetooth Menu** (to find the Bluetooth ID and PIN) (refer to Section 3.4.30).
2. Touch the Scan Serinus Analysers button at the bottom of the device screen.
3. Select the **Analyser ID** from either the **Paired Devices** or the **Other Available Devices**.
4. Input the PIN (if prompted) and press OK (refer to Section 3.4.30).

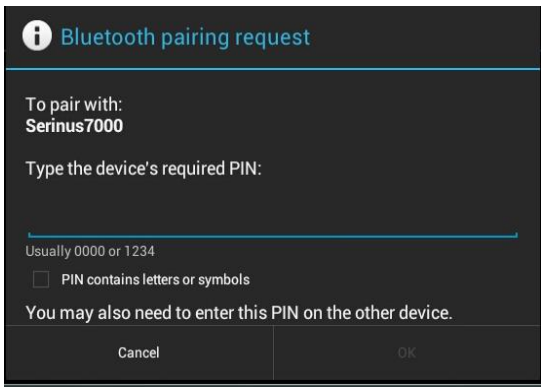

Figure 101 – Bluetooth Pairing Request

5. A screen shot of the instrument's current screen should appear on the user smartphone or tablet. To disconnect press the back key/button on the device.

Note: Once the instrument has been paired with the device it will appear under "Paired Devices" and the PIN will not need to be entered again. Only one Bluetooth connection can be made to an instrument at any one time.

4.7.3 Instrument Control

Once connected the user has full control of the instrument. The range for remote control depends on the device's Bluetooth capabilities and any intervening obstructions, but is usually up to 30 meters.

Remote Screen Operation

With the exception of the number pad, all button functions/actions can be performed by touching the screen. This includes the selection buttons and the scroll buttons. Touching any part of the screen where there is not already a button also enacts the functions of the scroll buttons.

Home Screen

Touching the upper half of the screen increases the contrast and touching the lower half of the screen decreases contrast on the real instrument.

Menus

Touching the upper or lower half of the screen allows the user to scroll up and down respectively.

Right-hand Section of the Screen

Swiping from right to left brings up the number pad for entering numbers (swipe from left to right to hide the number pad).

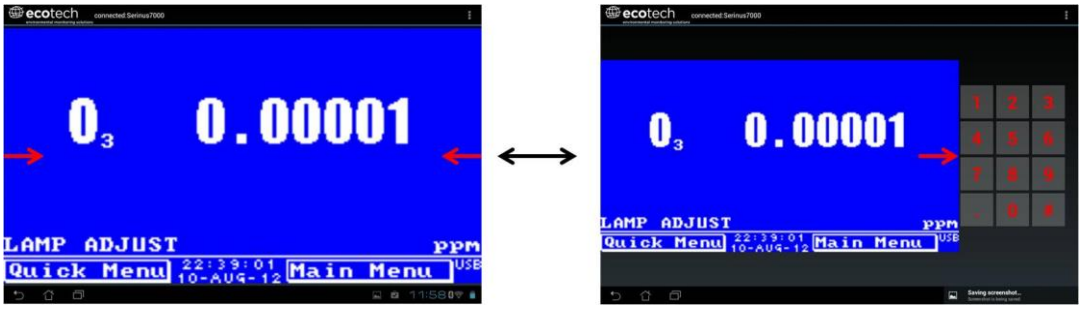

Figure 102 – Showing or Hiding the NumPad

Left-hand Section of the Screen

Swiping from left to right brings up a list of available analysers (swipe from right to left to hide the instrument list).

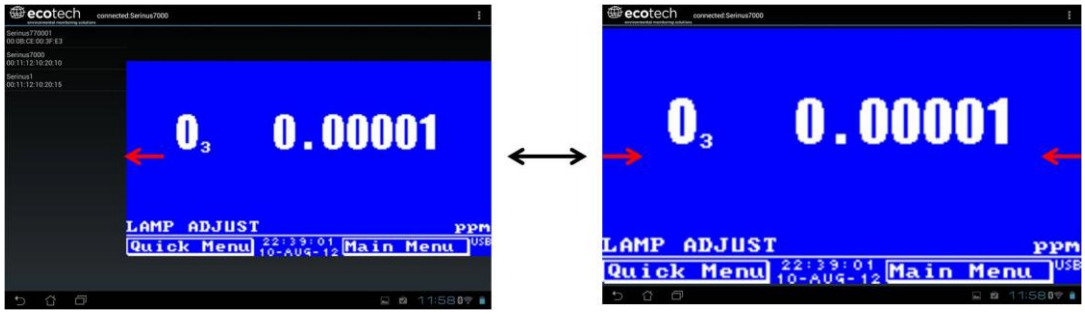

Figure 103 – Switching Analysers

Back Button

This button will enable the user to return to the selection screen, allowing connection to a different instrument.

Options Menu

The Options Menu is accessed by the grey button in the top right corner of the screen or pressing the Menu Button, depending on the user's Android device.

Refresh	Refresh the display.
Show/Hide NumPad	Show or hide the number pad.
Real Time Plot	Refer to Section 4.7.4
Download	Refer to Section 4.7.5.
Get Parameters	Refer to Section 4.7.6.
Preferences	Refer to Section 4.7.7.

4.7.4 Real-Time Plot

Allows the user to view real-time plotting of up to four parameters at the same time. The user can also scroll from left to right, top to bottom or zoom in and out on the plot by swiping/pinching.

Once the plot is zoomed or scrolled, it enters into Observer Mode, meaning that auto-scaling is suspended. Press at the top of the screen (where it says Observer Mode) to return to Normal Mode.

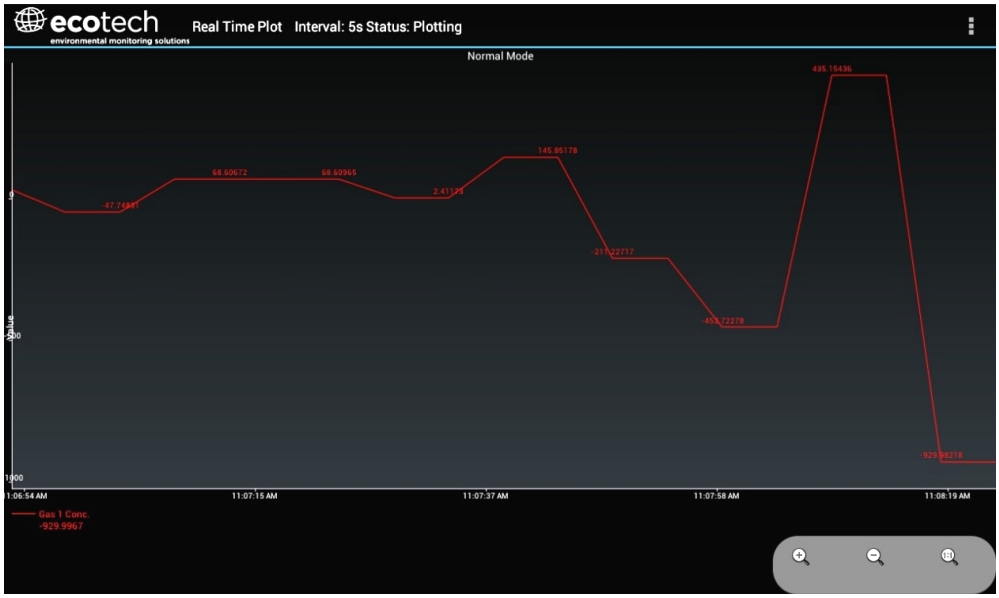

Figure 104 – Real-Time Plot

Options Menu

The Options Menu is accessed by the grey button in the top right corner of the screen or pressing the menu button, depending on the user's Android device.

Start	Restarts graphing if it has been stopped and returns the graph to **Normal Mode.**
Stop	Stops collecting data. In this mode the user can scroll the display without going into **Observer Mode,** because the system has no data collection to suspend. It is necessary to "Stop" data collection to set the interval.
Clear	Clears the window and restarts the graphing.
Save	Saves an image of the graph and accompanying data in the location specified in preferences (refer to Section 4.7.7). The user will also be asked whether they want to send the file and data via email. When saving the data, the user can choose to **Save All Data** or **Customise** the length of the data by entering a time between five minutes and six hours. Only the data from the start of collection to that limit will be saved (although the plot will still appear exactly as it does on the screen).
Set Interval	While data collection is stopped, the user can specify the time intervals between collections.

4.7.5 Download

Download logged data from the USB memory stick inside the instrument. All data logged by the instrument to the USB memory stick over the period of time specified will be collected. Due to the slow connection speed of Bluetooth, this should only be used for relatively short sections of data. Downloading one days' worth of one minute data is likely to take a couple of minutes.

Options Menu

Save	Generates a filename based on the start and end date/time specified. It saves the downloaded data in the location specified in preferences and asks to send the saved comma separated text file (.csv) as an attachment to an email. This file format does not include the parameter headings, just the values.
Send E-Mail	Sends an email with the parameter data in the body of the email, formatted as displayed (this includes the parameter name and the values).
Plot	Graphs the data that has been downloaded. The user is prompted to select which parameters to plot based on the parameters that were being logged (refer to Figure 105)
Preferences	Refer to Section 4.7.7.

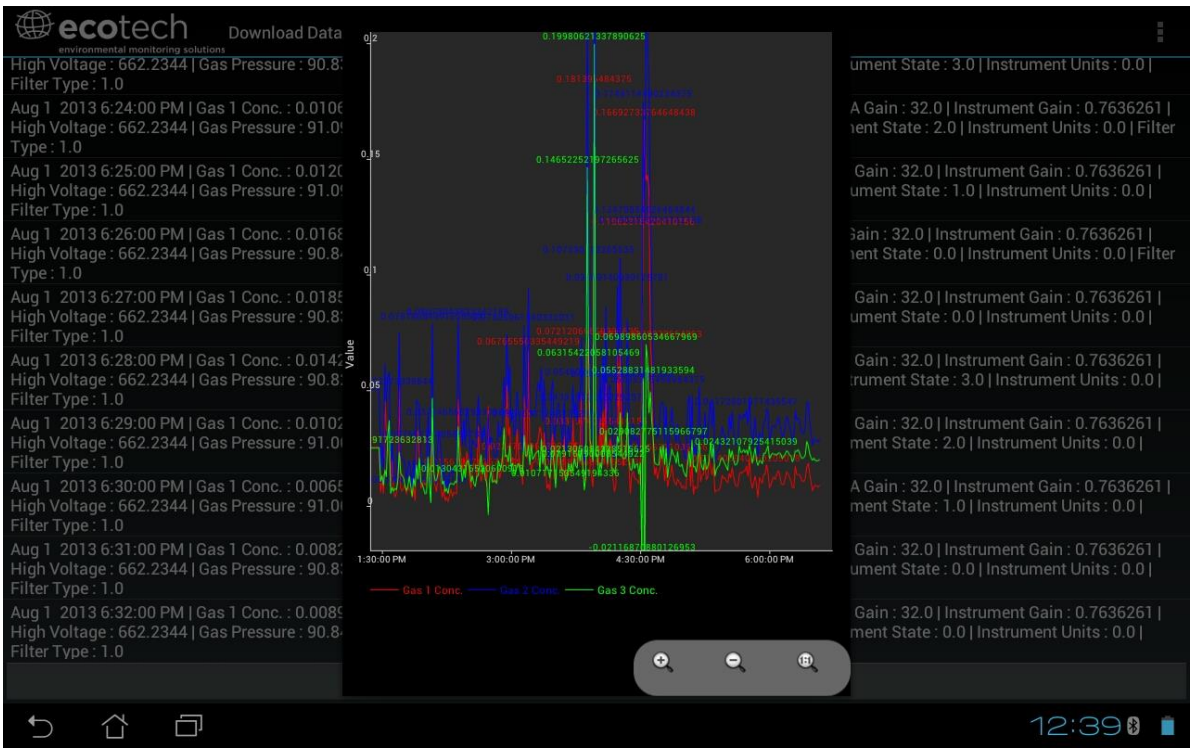

Figure 105 – Plot of Downloaded Data

4.7.6 Get Parameters

Download a list of parameters and corresponding values directly from the instrument. This list of parameters is a snap shot of the current instrument state and is very helpful in diagnosing any problems with the instrument.

Options Menu

Get Parameters	Refreshes the parameter list display.
Save	Generates a filename from the current date and time. It saves the parameter data in the location specified in preferences and asks to send the saved text file as an attachment to an email.
Send E-Mail	Sends an email with the parameter data in the body of the email, formatted as displayed.
Preferences	Refer to Section 4.7.7.

4.7.7 Preferences

The Preferences Menu allows the operator to adjust the directory settings, logged data format and the colour scheme settings. It can be accessed through the **Options Menu** in most windows.

Directory Settings

The operator can specify/select where to save the parameter lists, logged data and real time plots.

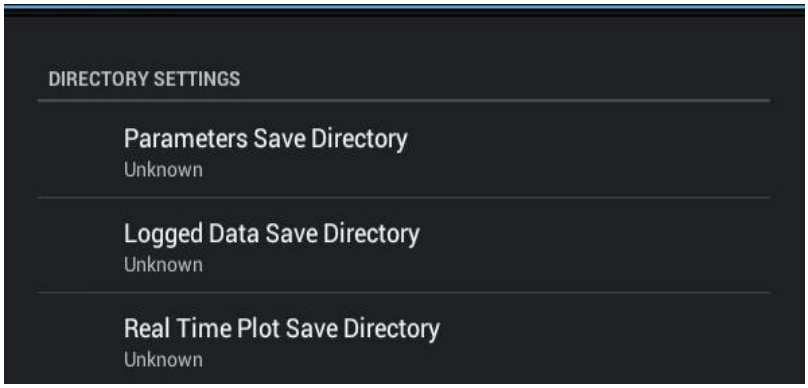

Figure 106 – Directory Settings

Logs Format

When downloading logged data, the parameters can be displayed on one line or each parameter on a separate line.

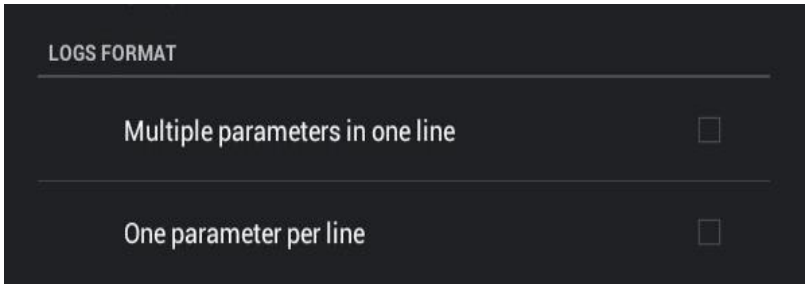

Figure 107 – Logs Format

Colour Theme Settings

Allows the user to choose a colour scheme for the remote screen, either Matrix, Classic, Emacs or Custom.

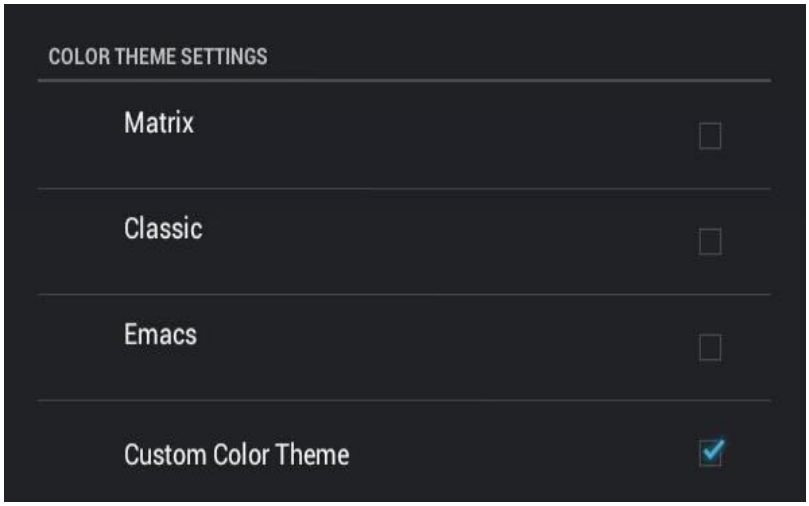

Figure 108 – Colour Theme Settings

This page is intentionally blank.

5. Calibration

The following sections describe how to calibrate the span and zero points of the instrument as well as giving a brief overview of the calibration system.

Main Menu → Calibration Menu (refer to Section 3.4.10 for information on menu items).

5.1 Overview

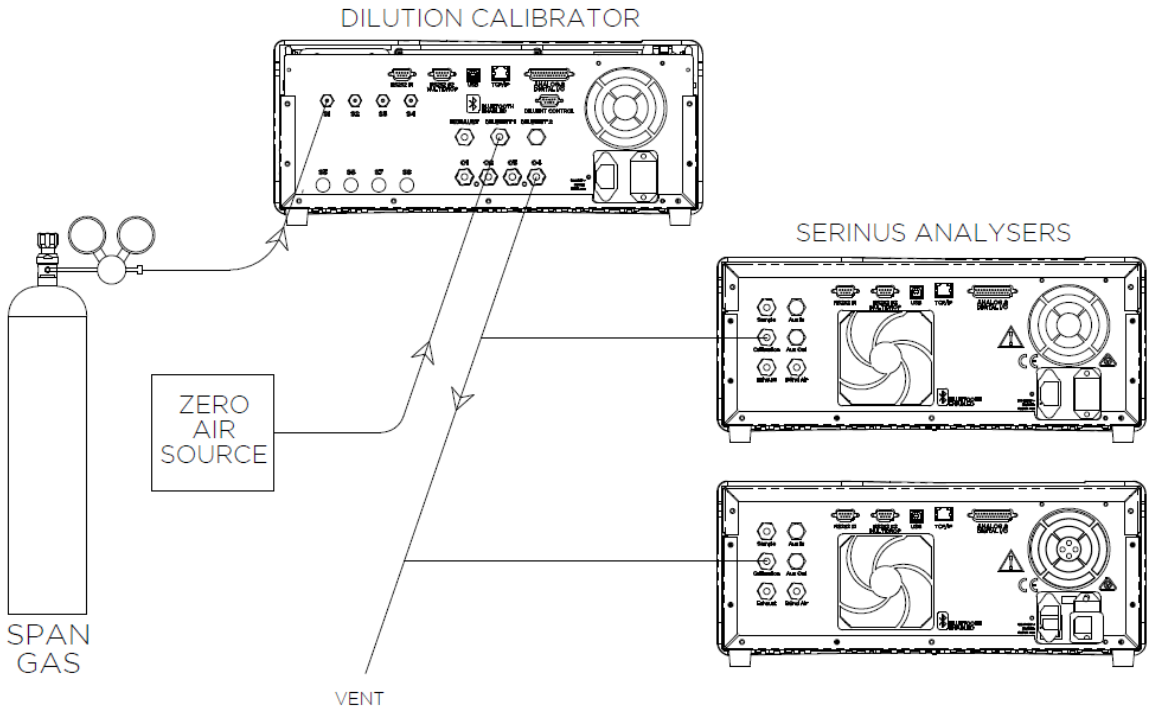

Figure 109 – Example of a Calibration System

CAUTION

All calibration gases must be supplied at ambient pressure to avoid damaging the instrument. If direct gas cylinder connection is required, high pressure Span/Zero options can be installed at time of ordering.

The calibration chapter consists of a:

- General discussion of calibration.
- Description of the pressure calibration procedure.
- Description of the Zero/Span precision check and calibration procedures.
- Description of the multipoint precision check procedure.

The Serinus 50 analyser is a precision measuring device which must be calibrated against a known source of SO_2 (e.g. a certified gas cylinder).

There are several different types of checks/calibrations performed:

- Level 1 Calibration - A simplified two-point instrument calibration used when instrument linearity does not need to be checked or verified. This check is typically performed on a monthly basis. Adjustments to the instrument response can only be made when performing level 1 calibration.
- Level 2 Calibration - A simple check of the instrument's response. Level 2 checks may be performed using non-certified reference sources and are most often used as a performance monitoring tool. The instrument may not be adjusted
- Multipoint Precision Check - A series of calibration points, typically covering zero and 4 up-scale points, measured using a certified reference atmosphere and covering the instruments FS measurement range. These precision checks are used to determine the linearity of the instrument response across its measurement range.

In general terms, the calibration process includes the following steps:

1. Establish a reliable and stable calibration source.
2. Provide a satisfactory connection between the calibration source and the instrument.
3. Calibrate the instrument against the calibration source.

Multipoint precision check is used to establish the relationship between instrument response and pollutant concentration over the instrument's full scale range. Zero and span calibrations are frequently used to provide a two-point calibration or an indication of instrument stability and function.

Note: Zero calibrations are not recommended by Acoem Australasia, but may be performed when specifically required by a user. Zero calibrations tend to mask issues that should be addressed during maintenance/service.

Regulations generally require that the instrument be span calibrated any time:

- The instrument is moved.
- The instrument is serviced.
- When changing the instruments units between volumetric and gravimetric.
- Whenever the instrument characteristics may have changed.

Regulatory agencies establish the time intervals at which the instrument must be calibrated to ensure satisfactory data for their purposes.

Note: Use of the Serinus 50 analyser as a U.S. EPA or EN-designated equivalent method requires periodic multipoint precision checks in accordance with the procedure described below. In addition, the instrument must be set to the parameters indicated in U.S. EPA (refer to Section 2.4) or EN Equivalent Set-up (refer to Section 2.5).

5.2 Pressure Calibration

The pressure sensors are a vital component of the instruments operation. The pressure calibration should be checked on installation or whenever maintenance is performed.

A thorough leak check must be performed prior to performing a pressure calibration (refer to Section 6.4.4).

The pressure calibration can either be a two point calibration (one point under vacuum and the other at ambient pressure) or a single ambient point calibration (when very minor adjustments are required).

Note: Ensure that the instrument has been running for at least one hour before any calibration is performed to ensure the instrument's stability. When performing a two point pressure calibration, it is advisable to perform the *vacuum pressure calibration* first.

5.2.1 Full Pressure Calibration (Two Point Calibration)

This section outlines how to perform a full pressure calibration. Using the required equipment follow the steps below to complete a full pressure calibration.

Note: Ensure that the instrument has been running for at least one hour before the calibration is performed.

Note: Ensure units of measure are the same on both the barometer and instrument.

Equipment Required

- Barometer
- Vacuum source

Procedure

1. Turn OFF the vacuum source and allow the instrument to return to ambient pressure.
2. Disconnect any external tubing connected to the rear of the instrument.
3. Open - **Main Menu → Calibration Menu → Pressure Calibration Menu** - (read note) - OK.

Note: This action will place the valve sequencing on hold; normal sampling will be interrupted.

4. Edit - **Vacuum Set Pt.** - (Read displayed instructions) - OK.
5. Refer to Figure 110. Connect a barometer to the **BGnd Air Port**.

6. Refer to Figure 110. Connect a vacuum source to **Exhaust Port** of instrument.

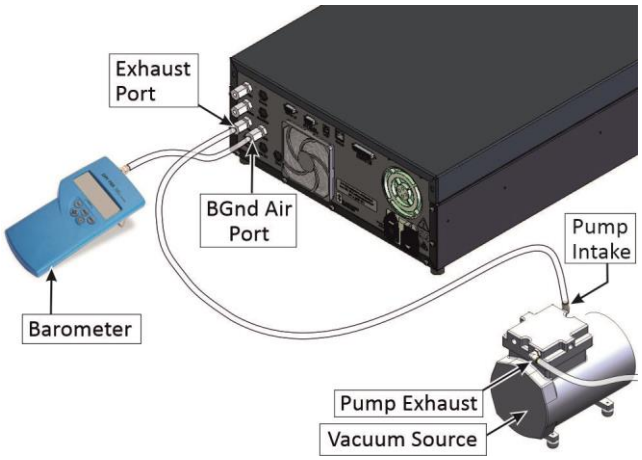

Figure 110 – Full Pressure Calibration Set-up

7. Wait 2 - 5 minutes and ensure the pressure reading on the barometer has dropped and is stable.
8. Enter the barometer reading into the instrument - Accept.
9. Read displayed instructions - OK.
10. Turn OFF the vacuum source and slowly remove the barometer from the **BGnd Air Port** and allow the instrument to return to ambient.
11. Refer to Figure 111. Disconnect the vacuum source from the **Exhaust Port**.



Figure 111 – Full Pressure Calibration Set-up (Ambient)

12. Wait 2 - 5 min, enter the ambient barometer reading into the instrument - Accept.

Note: Both of the pressure sensors should now be displaying the current ambient pressure and they should be the same value within 3 torr of each other.

13. Back - **Pressure Calibration Menu** - (read note) - OK.

5.2.2 Pressure Calibration (Ambient Only)

Full pressure calibrations are generally recommended, however it is possible to calibrate only the ambient point in cases where only a minor ambient pressure adjustment is required.

Note: Ensure that the instrument has been running for at least one hour before any calibration is performed to ensure the instrument's stability.

Note: Ensure units of measure are the same on both the barometer and instrument.

Equipment Required

- Barometer

Procedure

1. Turn OFF the vacuum source and allow the instrument to return to ambient pressure.
2. Refer to Figure 112. Disconnect all external tubing connected to the rear ports of the instrument.



Figure 112 – Ambient Pressure Calibration Set-up

3. Open - **Main Menu → Calibration Menu → Pressure Calibration Menu** - (read note) - OK.

Note: This action will place the valve sequencing on hold; normal sampling will be interrupted.

4. Edit - **Ambient Set Pt.** - (Read displayed instructions) - OK.
5. Wait 2 - 5 minutes and enter the ambient barometer reading into the instrument - Accept.

Note: Both of the pressure sensors should now be displaying the current ambient pressure and they should be the same value within 3 torr of each other.

6. Back - **Pressure Calibration Menu** - (read note) - OK.

5.2.3 Pressure Calibration (Internal Pump Option Only)

The internal pump requires a separate pressure calibration procedure that replaces the one used in Section 5.2.1 and 5.2.2.

Note: Ensure that the instrument has been running for at least one hour before any calibration is performed to ensure sufficient stability.

Note: Ensure units of measure are the same on both the barometer and instrument.

Equipment Required

- Barometer
- Kynar 1/4” Blocker Nuts

Procedure

1. Disconnect any external tubing connected to the rear of the instrument.
2. Open - **Main Menu → Calibration Menu → Pressure Calibration Menu** - (read displayed note) - OK.

Note: Entering this menu will switch OFF the internal pump and place the valve sequencing on hold; normal sampling will be interrupted.

3. Edit - **Vacuum Set Point** - (read displayed instruction) - OK.
4. Refer to Figure 113. Connect a barometer to the **BGnd Air Port**.

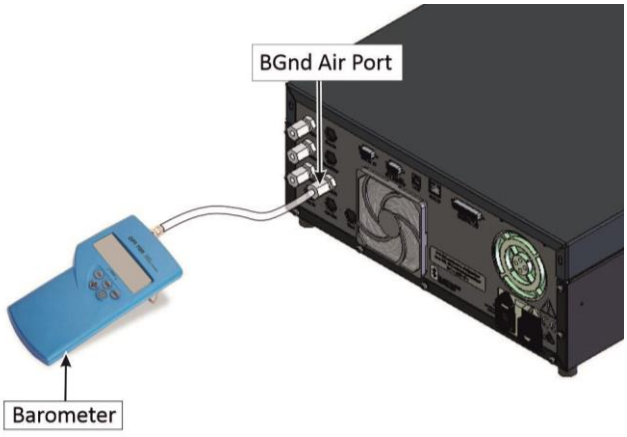

Figure 113 – Pressure Calibration (Internal Pump Option Only) Set-up

5. Remove the DFU from the bleed air fitting and block with a Kynar 1/4” blocker nut.

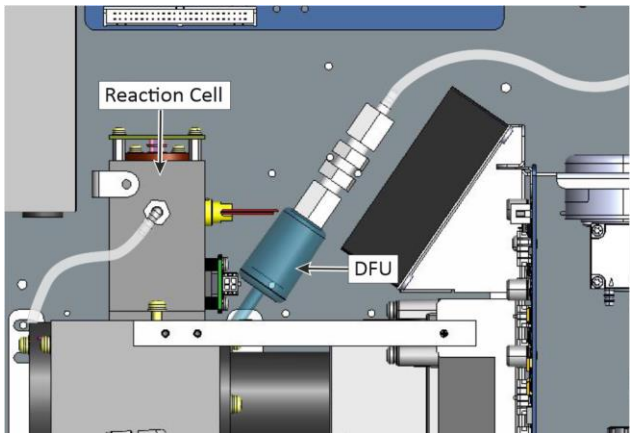

Figure 114 – DFU

6. Wait 2 - 5 minutes and ensure the pressure reading on the barometer is stable.
7. Enter the barometer reading into the instrument - Accept.
8. Read displayed instructions - OK.
9. The pump should now stop automatically. Disconnect the barometer from the **BGnd Air Port.**
10. Remove the Kynar 1/4” blocker nut from the bleed air fitting and replace the DFU.
11. Wait 2 - 5 minutes and enter the ambient barometer reading into the instrument - Accept.

Note: Both of the pressure sensors should now be displaying the current ambient pressure and they should be the same value within 3 torr of each other.

12. Back - **Pressure Calibration Menu** - (read note) - OK.

5.3 Manual Background

A background is a measurement that is made when SO_2 free air is drawn through the reaction cell. The resulting measurement signal (background) will include signals unrelated to SO_2, generated from the PMT due to internal offsets as well as cell fluorescence. The background is an electronic baseline, it is normally run every 24 hours automatically. There is sometimes a need for the user to run a manual background.

Note: A manual background is recommended before commencing a multipoint precision check.

Equipment Required

- N/A

Procedure

1. Open - **Main Menu → Calibration Menu**.
2. **Start** - **Manual Background → Running**.

3. Manual background will now display running and will proceed to draw air from the zero air scrubber for 9 minutes (4 minutes of fill time and 5 minutes of measure). The user can press stop at any time to cancel the background. At the end of the 9 minute period a new background voltage will be recorded in the event log as well as in the **Calculation Factors Menu**.

5.4 Zero Calibration

Zero calibrations are used to determine the zero response of the instrument and apply an offset to the reading.

Performing a zero calibration will adjust the **Zero Offset SO2**. This offset can be checked in the **Main Menu → Service Menu → Calculation Factors Menu** and should be very close to zero. A large offset may indicate a problem with the instrument (refer to Section 7).

Note: Acoem Australasia encourages regular zero precision checks; however Acoem Australasia recommends that the zero calibration only be performed when specifically required as it may mask issues that should be addressed during maintenance/service.

A zero calibration can be performed either through the **Calibration Port, Background Air Port** or the **Sample Port**. Refer to the instructions outlined in the next three sections:

Note: Ensure the instrument has been running for at least one hour before any calibration is performed to ensure sufficient stability.

5.4.1 Calibration Port

Equipment Required

- Zero Air Source (Refer to Section 1.3 for definition)

Procedure

1. Refer to Figure 115. Ensure a suitable zero air source is connected to the **Calibration Port**.

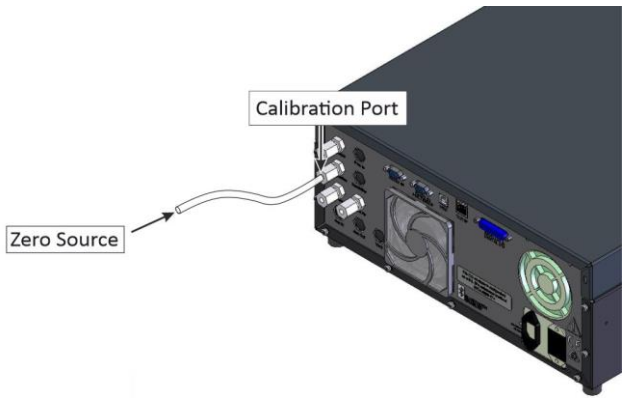

Figure 115 – Zero Calibration Set-up - 1

2. Open - **Main Menu → Calibration Menu**.
3. Select - **Cal. Type → Manual** - Accept.

4. Select - **Cal. Mode → Zero** - Accept.
5. Select - **Zero Source → External** - Accept.
6. Allow the instrument time to achieve a stable response.
7. Enter - **Zero Calibrate SO2** - OK.
8. Select - **Cal. Mode → Measure** - Accept (To return to sample measure).

5.4.2 Sample Port

Equipment Required

- Zero Air Source (Refer to Section 1.3 for definition)

Procedure

1. Refer to Figure 116. Ensure a suitable zero air source is connected to the **Sample Port**.

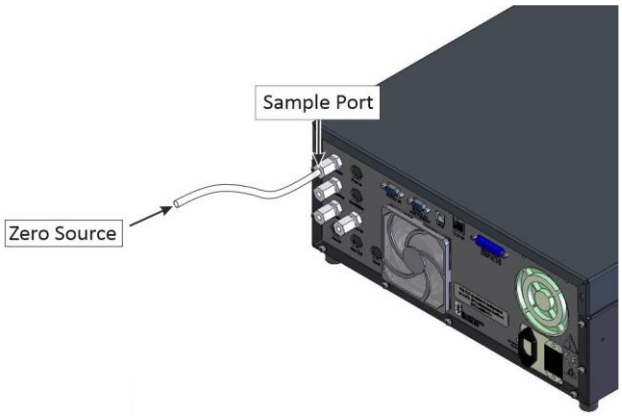

Figure 116 – Zero Calibration Set-up - 2

2. Open - **Main Menu → Calibration Menu.**
3. Select - **Cal. Type → Manual** - Accept.
4. Select - **Cal. Mode → Measure** - Accept.
5. Select - **Zero Source → External** - Accept.
6. Allow the instrument time to achieve a stable response.
7. Enter - **Zero Calibrate SO2** - OK.
8. Disconnect the zero source and reconnect the sample line to the **Sample Port**.

5.4.3 Background Air Port

Equipment Required

- N/A

Procedure

1. Open - **Main Menu → Calibration Menu.**

2. Select - **Cal. Type → Manual** - Accept**.**
3. Select - **Cal. Mode → Zero** - Accept.
4. Select - **Zero Source → Internal** - Accept.
5. Allow the instrument time to achieve a stable response.
6. Enter - **Zero Calibrate SO2** - OK.
7. Select - **Cal. Mode → Measure** - Accept (To return to sample measure).

5.5 Span Calibration

A span calibration is a calibration performed at the upper end of the instrument's measurement range. Acoem Australasia recommends calibration at 80% of the full scale measurement or operating range of the instrument.

While the instrument range is commonly set as a default 0 - 500 ppb, this is widely recognised as no longer being valid with modern digital communication and most regulators will now recommend a range more suited to local conditions.

A span gas can be supplied through either the **Calibration Port** or **Sample Port**. Refer to the instructions outlined in the next two sections.

Note: Ensure that the instrument has been running for at least one hour before any calibration is performed to ensure the instrument's stability.

5.5.1 Calibration Port

Equipment Required

- Span Source

Procedure

1. Refer to Figure 117. Ensure a suitable span source is connected to the **Calibration Port**.

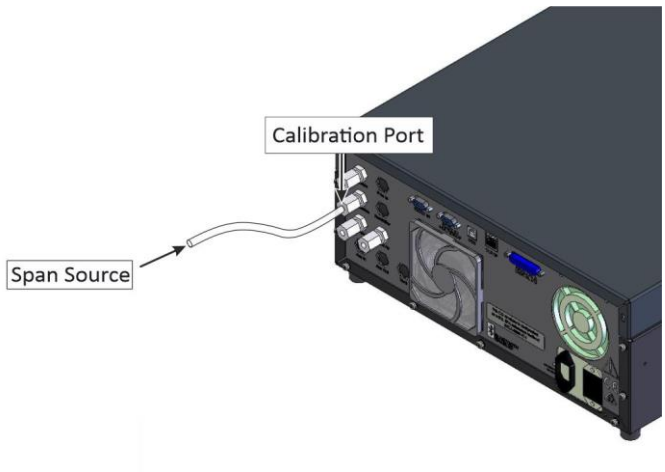

Figure 117 – Span Calibration Set-up - 1

2. If diluting the gas with a dilution calibrator, set the output concentration to 80% of the instrument measurement range.
3. Open - **Main Menu → Calibration Menu.**
4. **Select - Cal. Type → Manual - Accept.**
5. Select - **Cal. Mode → Span** - Accept.
6. Let the instrument stabilise, typically 15 minutes.
7. Enter - **Span Calibrate SO2** - (Enter the span output concentration) - Accept.
8. Select - **Cal. Mode → Measure** - Accept (To return to sample measure).

5.5.2 Sample Port

Equipment Required

- Span source

Procedure

1. Refer to Figure 118. Ensure suitable span source is connected to the **Sample Port**.

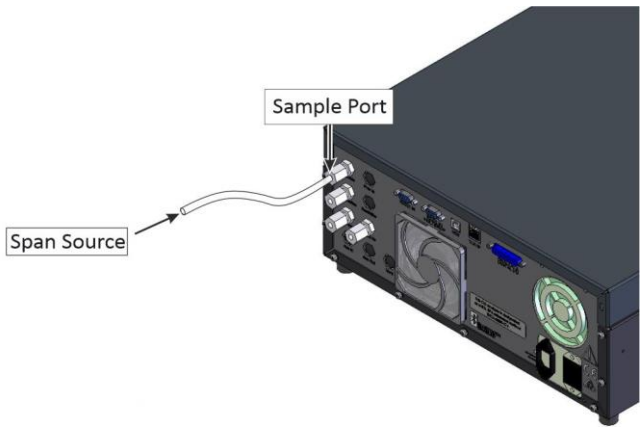

Figure 118 – Span Calibration Set-up - 2

2. If diluting the gas with a dilution calibrator, set the output concentration to 80% of the instrument measurement range.
3. Open - **Main Menu → Calibration Menu**.
4. **Select - Cal. Type → Manual - Accept.**
5. Select - **Cal. Mode → Measure** - Accept.
6. Let the instrument stabilise, typically 15 minutes.
7. Enter - **Span Calibrate SO2** - (Enter the span output concentration) - Accept.
8. Disconnect the span source and reconnect the sample line to the **Sample Port**.

5.5.3 Manual Instrument Gain and Offset Adjustments



CAUTION

Manual adjustment of the Instrument Gain does not take into account the PTF correction and can lead to an incorrect calibration.

At times it may be desirable to manually adjust the instrument's gain and offset. Typically this option is only used when an instrument calibration has been corrupted and the user wishes to reset the instrument response factors prior to performing a new calibration.

To manually adjust the instrument follow the below procedure:

Procedure

1. Open - **Main Menu → Service Menu → Calculation Factors Menu**.
2. Edit - **Instrument Gain** - (Adjust as required. 1 is the default) - Accept.
3. Edit - **Zero Offset SO2** - (Adjust as required. 0 is the default) - Accept.

5.6 Precision Check

Similar to a normal zero or span calibration, a precision check is a *Level 2 calibration* that may be performed using a non-certified reference. The instrument is supplied with a known concentration of span gas (or zero air) and the instrument's response observed. However, no adjustment to the instrument response is made during a precision check.

Note: Ensure that the instrument has been running for at least one hour before any calibration is performed to ensure the sufficient stability.

Equipment Required

- Span source
- Zero source

Procedure

1. Supply the instrument with a zero source (refer to Section 5.4 for the procedure of setting up a zero, but do not do a **Zero Calibrate SO2**).
2. Observe and record the measurement from the instrument.
3. Supply the instrument with a span source (refer to Section 5.5 for the procedure of setting up a span but do not do a **Span Calibrate SO2**).
4. Observe and record the measurement from the instrument.
5. Check both readings against your local applicable standards.
6. Select - **Cal. Mode → Measure** - Accept (To return to sample measure).

If an instrument fails a span precision check (based on your local applicable standards), perform a span calibration (refer to Section 5.5).

If an instrument fails a zero precision check (based on your local applicable standards), resolve the issue referring to Section 7 **Zero Drift**.

5.7 Multipoint Precision Check

A multipoint precision check is used to determine the linear response of the instrument across its operating range. The instrument is supplied with span gas at multiple known concentrations, typically a zero point and at least four up-scale points, spread across the operating range of the instrument. The observed concentrations are compared to expected values and the linearity of the instrument assessed against local applicable standards.

Note: The instrument is inherently linear and the instrument gain should **not** be adjusted at each individual point. Non-linearity indicates a problem with the instrument (refer to Section 7). Ensure that the instrument has been running for at least one hour before any calibration is performed to ensure the instrument's stability.

Several methods for producing multiple known concentrations are available to use, such as connecting multiple certified bottles at different concentrations. However, Acoem Australasia strongly recommends the use of a dilution calibrator and a certified cylinder of SO_2 at an appropriate concentration (typically 40 - 100 ppm SO_2 balance in Nitrogen).

Procedure

1. Connect your calibration system to the **Calibration Port** of the instrument (Acoem Australasia recommends the Serinus Cal 1000 as a minimum, refer to Figure 109).
2. Generate and record the displayed span concentrations for (at least) 5 stepped points (of known concentrations) evenly spaced across the instrument measurement range (refer to the example below).
3. Then using a program such as MS Excel, create an X Y scatter plot of expected concentration versus the recorded instrument response and use linear regression to calculate the line of best fit and the correlation factor (R^2) - refer to the users local applicable standards.

   Example for an instrument measurement range of 500 ppb:

   a. For the 1st concentration, set the gas dilution calibrator to supply **400 ppb** SO_2 gas to the instrument.

   b. Allow the instrument to sample the calibration gas until a prolonged stable response is achieved (the amount of time this takes is impacted by the calibration setup) and record the instrument response.

   c. Repeat the above steps using concentrations of **300 ppb, 200 ppb, 100 ppb** and a **Zero** point.

   d. Graph the results and use linear regression to determine a pass or fail as per applicable local standards.

$$y = mx + c$$

Note: To highlight hysteresis errors, it is advisable to run the multipoint check in both *descending* and *ascending* order - refer to applicable local standards.

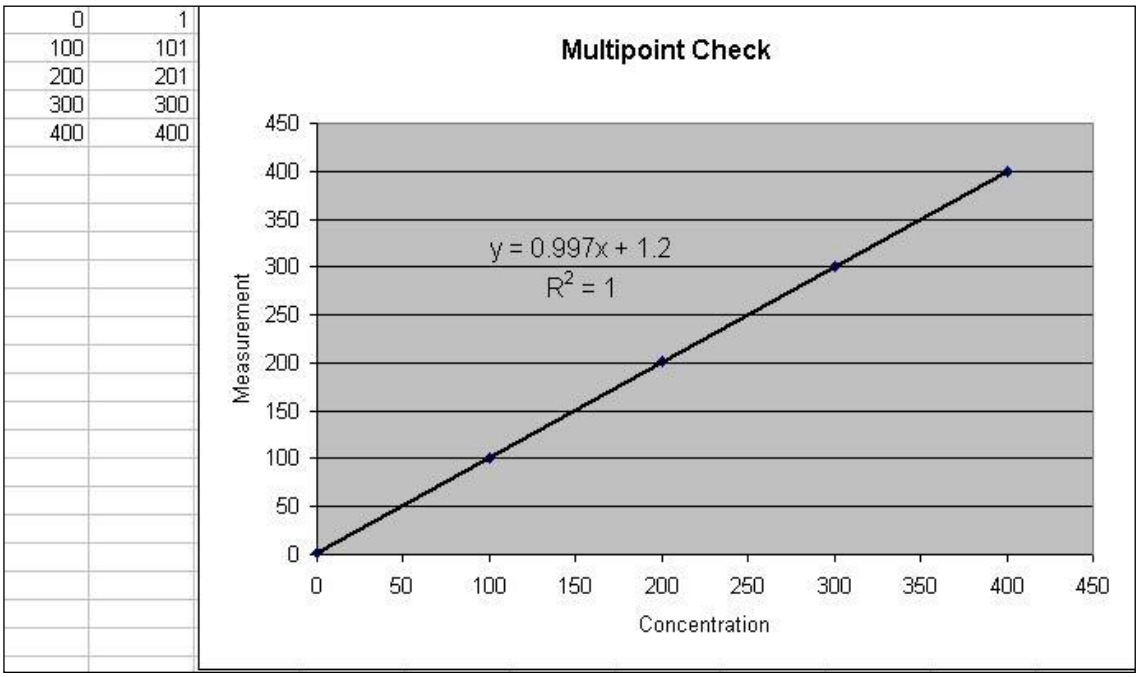

Figure 119 – Excel Graph of Multipoint Calibration

4. The following is a guide to approximate expected good results:
   a. The gradient (m) falls between 0.98 and 1.02.
   b. The intercept (b) lies between -2 and +2.
   c. The correlation (R^2) is greater than 0.99.
5. If unsatisfactory results are observed refer to Section 7 - Troubleshooting.

5.8 Flow Calibration (Internal Pump Option Only)

This procedure calibrates the rate of the flow generated by the internal pump. The following procedure must be performed:

- After a service or repair.
- When the external flow check has found the flow to be outside normal range.
- When a new pump has been installed.
- When the instrument is reset to factory defaults.

Equipment Required

- Calibrated Flow Meter

Procedure

1. Disconnect any external tubing connected to the rear ports of the instrument (**Sample Port**, **Exhaust Port**, etc.).
2. Open - **Main Menu → Calibration Menu → Flow Calibration Menu**.

3. Select - **Pump Control → MANUAL** - Accept.

Note: This action will set the **Pump Control** to **Manual** and place the valve sequencing on hold; normal sampling will be interrupted.

4. OFF - **Internal Pump → Off**.
5. Wait for the **Sample Flow** to become stable around 0.0 slpm (± 0.01 slpm).
6. Set - **Cal. Zero** - Yes (Calibration of your zero point).
7. Connect a calibrated flow meter to the **Sample Port**.
8. ON - **Internal Pump → On**.
9. Edit the **Coarse** and **Fine** pots until the calibrated flow meter reads the desired instrument **Sample Flow** rate (**Set Point**).

Note: Edit the **Fine** pot to 253 then edit the **Coarse** to be as close as possible to desired reading and use **Fine** pot to make it exact.

10. Edit - **Cal. Point - (**Enter the reading from the flow meter) - Accept.
11. Select - **Pump Control → START** - Accept.
12. Leave for up to five minutes to return to normal operation. If instrument doesn't return to normal there may be a blockage (refer to Section 7).
13. Remove flow meter and reconnect external tubbing.
14. Back - **Flow Calibration Menu** - (read note) - OK.

5.9 High Pressure Zero/Span Valve (Option)

If the instrument was ordered with this option, the internal pressurised calibration valves will already be installed within the instrument as either a zero or span calibration source, thus no other internal connections need to be made.

Note: Before using a high pressure span or zero as a source for calibrating the instrument, check the local regulatory requirements. This is generally only be used as an operational check of the instrument's zero point and single span point (recommended as 80% of full scale).

5.9.1 Single Pressurised Calibration Option

Set-Up of Single Calibration Option

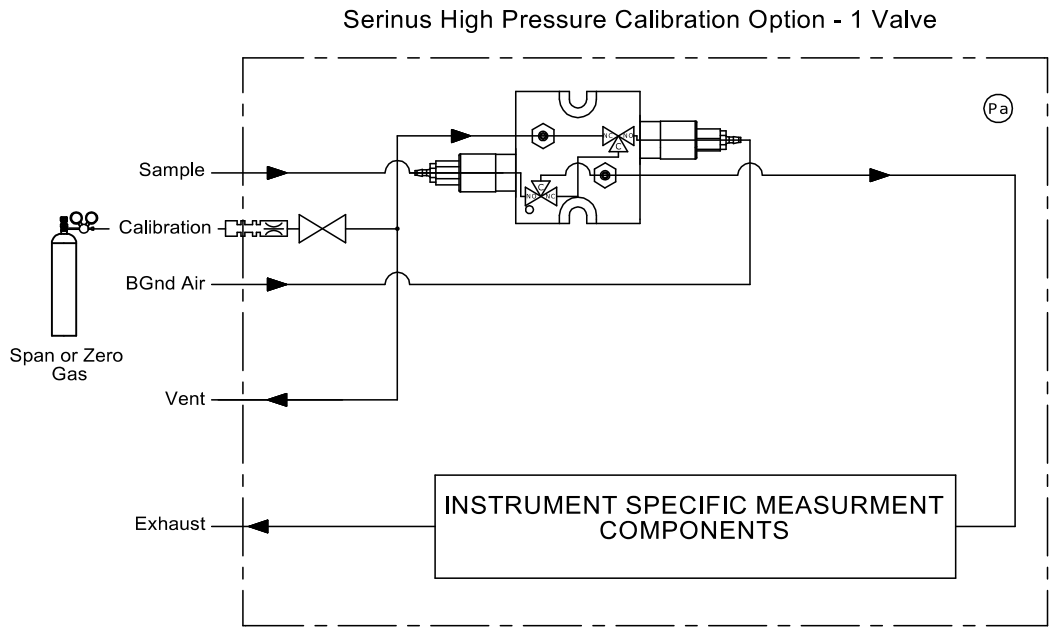

Figure 120 – Single High Pressure Calibration Option

When using the pressurised calibration option, either a high pressure zero or span cylinder (depending on the option ordered) should be connected to the **Calibration Port**.

Equipment Required

- Calibrated Flow Meter
- Gas Cylinder and Accessories

Procedure

1. Ensure the gas cylinder is fitted with an appropriate gas regulator with a shut off valve.
2. Connect a 1/4” line of stainless steel tubing between the gas cylinder and the instruments **Calibration** port.

Note: This connection may need to be retightened during this operation.

3. Open the cylinder main valve and adjust the regulator to 15 psig.
4. Open the regulator’s shut off valve and test for leaks:
   a. Pressurise the line.
   b. Close the cylinder main valve.
   c. If pressure drops by more than 2 PSI over five minutes, check the connections and retest.
   d. Open cylinder main valve.

5. Temporarily place a flow meter on the **Vent Port**.
6. Open - **Main Menu → Calibration Menu**.
7. Select - **Cal. Type → Manual - Accept.**
8. Select - **Cal. Mode → Span** or **Zero** - Accept (Depending on the option installed).

Note: When using the high pressure zero option, ensure **Zero Source** is set to **External**.

9. Adjust the regulator pressure until the flow meter on the **Vent Port** is between 0.5 and 1 slpm. This is the excess calibration gas flow rate.

Note: Do not exceed a pressure of 2 bars, this can damage the instrument and cause gas leakage.

Return to Normal Operation

1. Select - **Cal. Mode → Measure** - Accept. (To return to sample measure).
2. Remove the flow meter on the **Vent Port** and connect a vent line.
3. Reconnect the instrument fittings and return to the original set-up.

The instrument is now in normal operation mode. When either zero or span calibration is initiated (depending on which option has been installed) the instrument will automatically open the valves to run a pressurised calibration.

5.9.2 Dual Pressurised Calibration Option

Set-Up of Dual Calibration Option

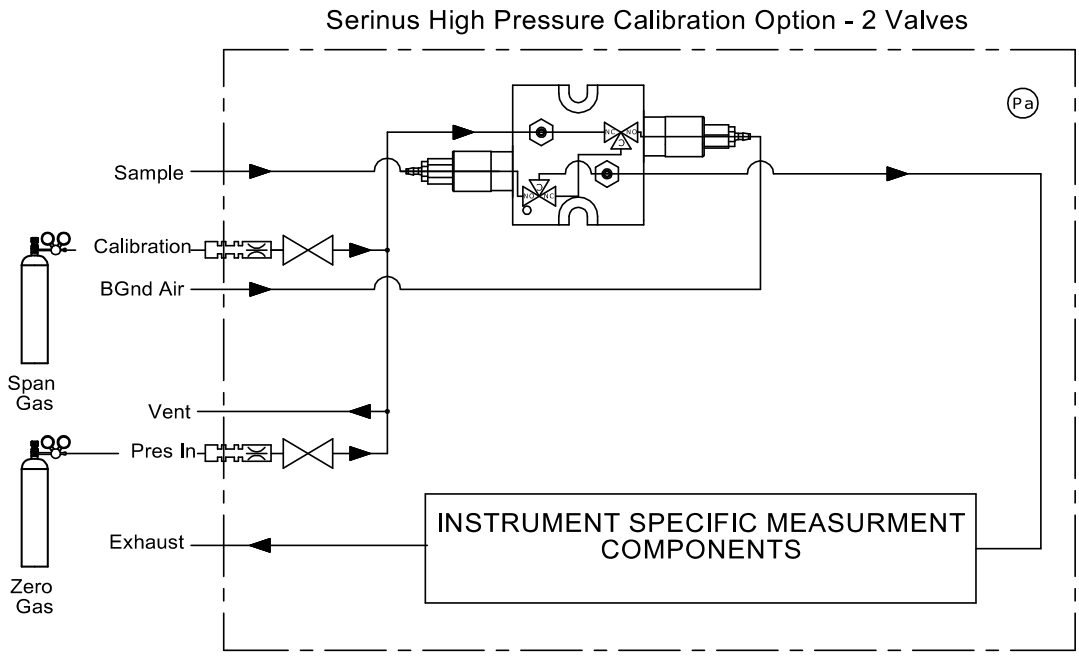

Figure 121 – Dual High Pressure Calibration Option

When using the dual pressurised calibration option, a high pressure zero cylinder should be connected to the **Pres In Port** and a high pressure span cylinder connected to the **Calibration** port.

Equipment Required

- Calibrated Flow Meter
- Gas Cylinder of Zero air and Accessories
- Gas Cylinder of SO_2 and Accessories

Procedure

1. Ensure the gas cylinder is fitted with an appropriate gas regulator with a shut off valve.
2. Connect a 1/4" line of stainless steel tubing between the appropriate gas cylinders and the instrument's **Pres In Port** and **Calibration** port.

Note: This connection may need to be retightened during this operation.

3. Open the cylinder main valve and adjust the regulator to 15 psig.
4. Open the regulator's shutoff valve and test for leaks:
   a. Pressurise the line.
   b. Close the cylinder main valve.
   c. If pressure drops by more than 2 PSI over five minutes, check the connections and retest.
   d. Open cylinder main valve.
5. Temporarily place a flow meter on the **Vent** port (This port is now used as the high pressure calibration vent for both span and zero).
6. Open - **Main Menu → Calibration Menu**.
7. **Select - Cal. Type → Manual - Accept.**
8. Select - **Cal. Mode → Zero** - Accept.

Note: When using the high pressure zero option, ensure **Zero Source** is set to **External**.

9. Adjust the regulator pressure until the flow meter on the vent line (**Vent**) is between 0.5 and 1 slpm. This is the excess calibration gas flow rate.

Note: Do not exceed a pressure of two bars, this can damage the instrument and cause gas leakage.

10. Select - **Cal. Mode → Span** - Accept.
11. Adjust the regulator pressure until the flow meter on the vent line (**Vent**) is between 0.5 and 1 slpm. This is the excess calibration gas flow rate.

Note: Do not exceed a pressure of two bars, this can damage the instrument and cause gas leakage.

Return to Normal Operation

1. Select - **Cal. Mode → Measure** - Accept. (To return to sample measure).
2. Remove the flow meter on the **Vent** port and connect a vent line.
3. Reconnect the instrument fittings and return to the original set-up.

The instrument is now in normal operation mode. When either zero or span calibration is initiated the instrument will automatically open the valves to run a pressurised calibration.

This page is intentionally blank.

6. Service

6.1 Additional Safety Requirements for Service Personnel

In addition to Safety Information stated previously, service personnel are also advised of the following:

- Documentation must be consulted in all cases where caution symbol is marked, in order to find out the nature of the potential hazards and any actions which have to be taken to avoid them. Refer to Table 1 – Internationally Recognised Symbols.
- Do not energise the instrument until all conductive cleaning liquids, used on internal components, are dried up
- Do not replace the detachable mains supply cord with an inadequately rated cord. Any mains supply cord that is used with the instrument must comply with the safety requirements (250 V/10 A minimum requirement).

6.2 Maintenance Tools

To perform general maintenance on the Serinus 50 the user may require the following equipment:

- Customizable Test Equipment Case PN: H070301
- Digital Multimeter & Leads (DMM) PN: E031081 & E031082
- Barometer PN: E031080
- Thermometer & Probe PN: E031078 & E031079
- Flow Meter (Select Range)
  - Range: 50 - 5000 sccm PN: ZBI-200-220M
- Minifit Extraction Tool PN: T030001
- Orifice/Sintered Filter Extraction Tool PN: H010046
- Leak Test Jig PN: H050069
- Computer/Laptop and Connection Cable for Diagnostic Tests
- 1.5 mm Hex Key
- Assortment of 1/4” and 1/8” Tubing and Fittings
- Zero Air Source
- Span Gas Source
- General Hand Tools



Figure 122 – Minifit Extraction Tool - (PN: T030001)



Figure 123 – Orifice/Sintered Filter Removal Tool - (PN: H010046)



Figure 124 – Leak Test Jig - (PN: H050069)



Figure 125 – Air Monitoring Test Equipment Kit (AMTEK) - Customisable

6.3 Maintenance Schedule

The maintenance intervals are determined by compliance standards that differ in various regions. The following is recommended by Acoem Australasia as a guide. Compliance with local regulatory or international standards is the responsibility of the user.

Table 7 – Maintenance Schedule

Interval *	Task Performed	Section
Nightly or Every 5 days	Perform precision check (Automated) Perform precision check (Manual) (This task is performed to ensure a high data capture rate)	5.6
Monthly	Perform precision check (pre-check) prior to commencing any service tasks or making any changes to the system as found in its current state. This task is necessary to validate any previously captured data.	5.6
	Check particulate filter, replace if full/dirty	6.4.1
	Perform a pressure check	6.4.10
	Check sample inlet system for moisture or foreign materials. Clean if necessary	
	Check fan filter and clean if necessary	6.4.2
	Check event log	3.4.1
	Check date and time is correct	3.4.8
	Check instrument status light	3.3.1
	External vacuum pump check (vacuum source)	
	leak check	6.4.4
	Perform SO_2 span calibration	5.5
	Perform precision check (post-check) once all service tasks have been completed. This task is necessary to establish a valid start point to begin capturing new data.	5.6
6 Monthly	Replace the PMT Desiccant Packs	6.4.5
	Perform multipoint precision check	5.7
	Calibrate analog outputs (only if used)	3.4.26
	Check the zero air scrubbers, replace if saturated	6.4.6
	Check the UV lamp alignment, replace if necessary	6.4.8
Yearly	Replace DFU	6.4.3
	Replace sintered filter and orifice (only if necessary)	6.4.7 & 9.11

* Suggested intervals for maintenance procedure are a guide only and may vary with sampling intensity and/or environmental conditions. Refer to your local regulatory standard for your personalised maintenance schedule.

6.4 Maintenance Procedures

6.4.1 Particulate Filter Replacement

Contamination of the 5-micron filter can result in degraded performance of the instrument, including slow response time, erroneous readings, temperature drift and various other problems. The frequency which the filter needs to be replaced is heavily dependent on the environmental conditions the instrument is sampling.

Procedure

1. Turn OFF the external pump and allow the instrument to return to ambient.
2. Open the lid of the instrument to access the sample filter holder (located in front right-hand corner).
3. Refer to Figure 126. Loosen the compression nut and pull-out the tube from the fitting.

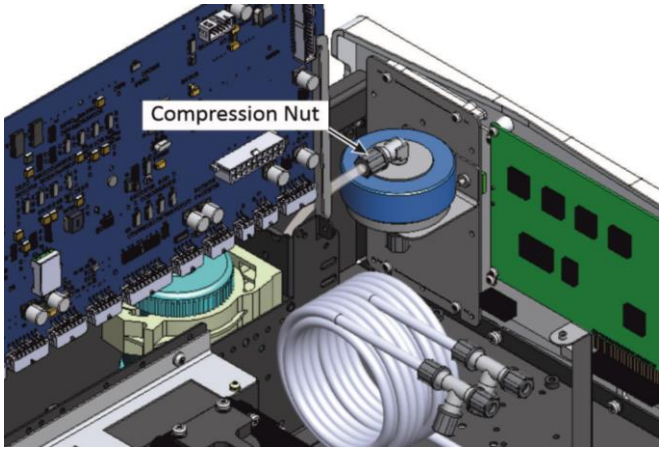

Figure 126 – Remove Tubing

4. Refer to Figure 127. Remove the retaining ring by turning it counter-clockwise.

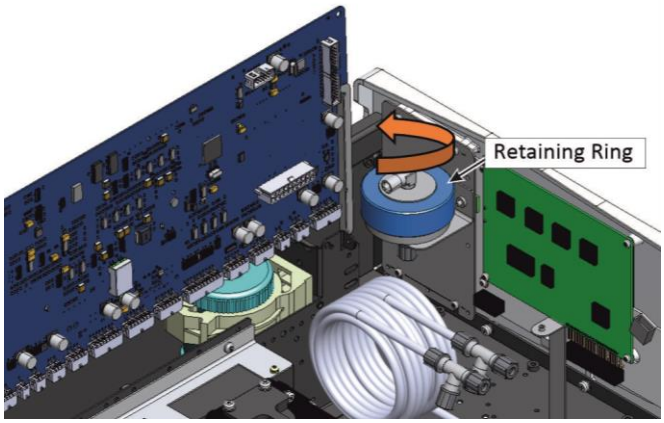

Figure 127 – Remove Retaining Ring

5. Refer to Figure 128. Remove the sample filter holder sealing cap.

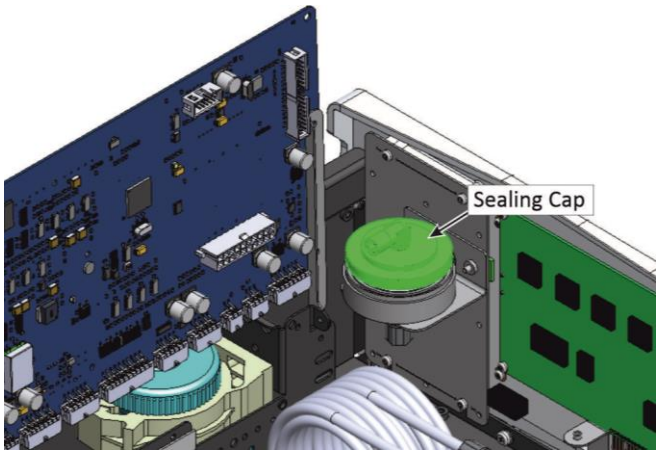

Figure 128 – Remove Filter Sealing Cap

6. Refer to Figure 129. Remove the old particulate filter.

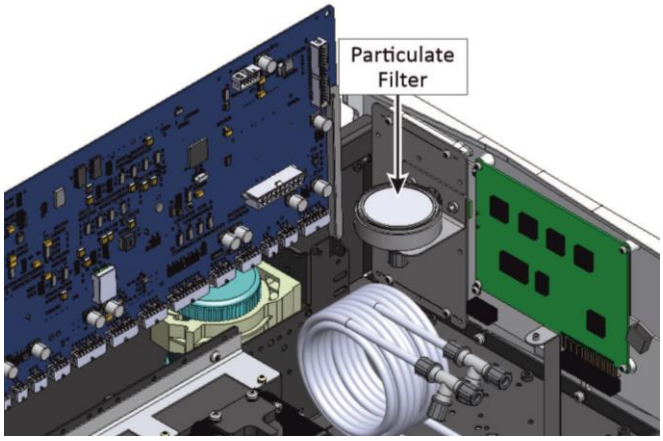

Figure 129 – Particulate Filter

7. If the inner surface of the sample filter components are dirty, then clean with damp lint free paper towel.
8. Place a new particulate filter paper into the body of the sample filter holder.

Note: Make sure filter body is completely dry before placing the new filter.

Note: Avoid to touch Particulate filter paper by hand use blue paper to place the filter into filter body.

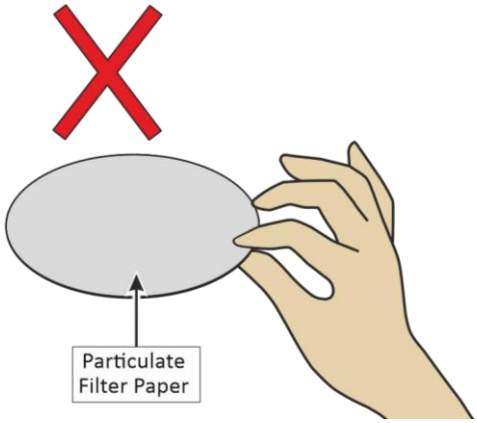

Figure 130 – Avoid to Touching Particulate Filter Paper

9. Replace the sample filter holder sealing cap and re-assembly the retaining ring by turning it clockwise.

Note: Make sure O-ring and particulate filter paper are installed correctly

Note: Make sure that Elbow Fitting is in the right direction, refer to Figure 131.

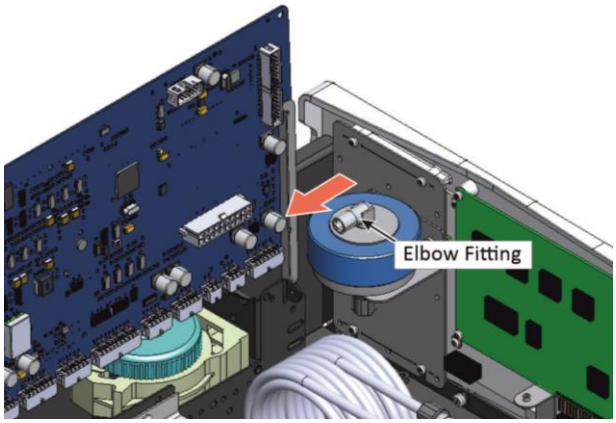

Figure 131 – Elbow Fitting Direction

10. Refer to Figure 132. Reconnect the compression nut and tubing to the elbow fitting.

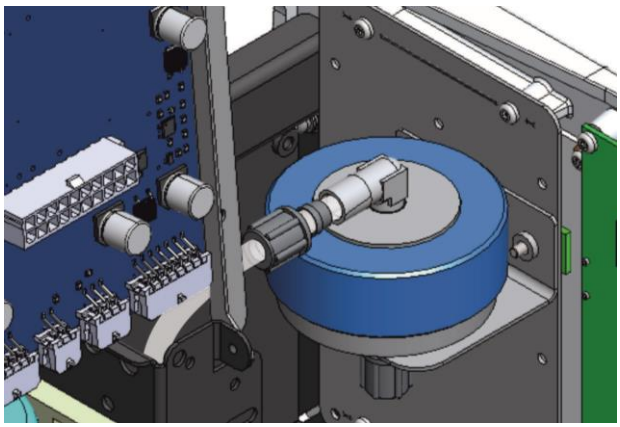

Figure 132 – Reconnect the Compression Nut and Tubing

11. Close the lid of the instrument and perform a leak check (refer to Section 6.4.4).

6.4.2 Clean Chassis Fan Filter

The chassis fan filter is located on the rear of the instrument. If this filter becomes contaminated with dust and dirt it may affect the cooling capacity of the instrument.

CAUTION

Do not insert a rod or finger into the cooling fans, otherwise injury may result.

Procedure

1. Refer to Figure 133. Remove outer filter casing and filter.

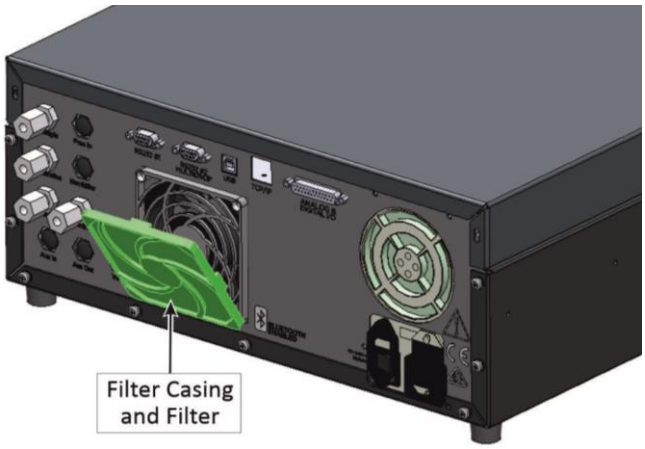

Figure 133 – Remove Filter Casing and Filter

2. Clean filter with water and dry it.

Note: Do not install the filter until completely dry, a wet filter can damage the instrument.

3. Reinstall filter and filter casing.

6.4.3 DFU Replacement

Equipment Required

- 5/8” Spanner

Procedure

1. Turn OFF the external pump and allow the instrument to return to ambient.
2. Remove the Kynar nuts from both ends of the DFU by turning them counter-clockwise.

3. Remove and replace the DFU (refer to Figure 134 left hand side of the DFU in the image should connect to the fitting at the bottom of the zero air scrubber).



Figure 134 – DFU

4. Tighten the Kynar nut clockwise.

6.4.4 Leak Check

Equipment Required

- Source of Vacuum (Pump)
- Leak Test Jig (PN: H050069)
- Kynar 1/4” Blocker Nuts
- Tubing and Assorted Fittings
- 5/8” Spanner
- 9/16” Spanner
- 7/16” Spanner

Procedure

Note: Ensure that the instrument has been running for at least one hour before this procedure is performed.

1. Turn OFF the vacuum source and allow the instrument to return to ambient pressure.
2. Disconnect all external tubing connected to the rear ports of the instrument.
3. Refer to Figure 135. Connect a leak check jig to the Exhaust Port of the instrument.

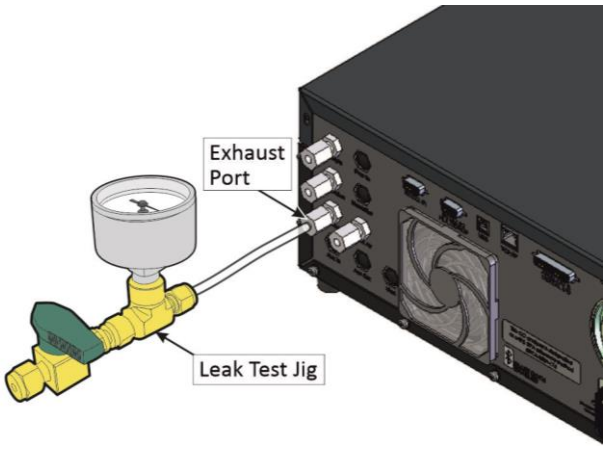

Figure 135 – Leak Test Jig on Exhaust Port

4. Refer to Figure 136. Connect a vacuum source to the shut off valve ensuring the shut off valve is in the open position.

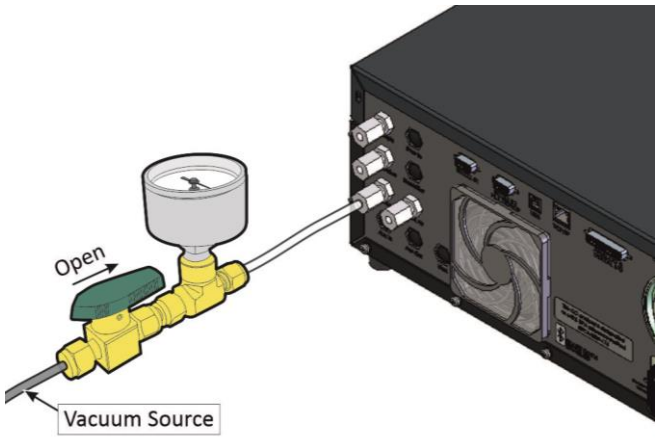

Figure 136 – Connect Vacuum Source

5. Refer to Figure 137. Block the instrument's **BGnd Air Port** with Kynar 1/4" blocker nut.

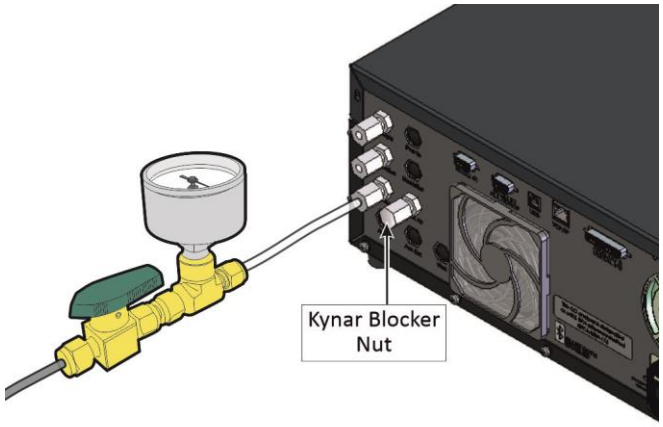

Figure 137 – Blocker BGnd Air Port

6. Open - **Main Menu → Service Menu → Diagnostics Menu → Valve Menu**.
7. Disable - **Valve Sequencing → Disabled**.
8. On - **Sample/Cal → On**
9. Off - **Internal Zero/Cal → Off**.
10. Off - **Pressurized Zero (OPT) → Off**.
11. Off - **Pressurized Span (OPT) → Off**.
12. Allow the instrument time to evacuate the pneumatic system (the time required will depend on the vacuum source used).
13. Close the shut off valve and record the vacuum indicated on the leak test jig. Wait for three minutes and observe the gauge on the leak test jig. It should not drop more than 5 kpa (37.5 torr). If the leak check passed skip to step 17.

14. Inspect the instrument's plumbing looking for obvious damage. Check the condition of fittings, sample filter holder plus the O-rings both in the filter assembly and in the reaction cell assembly.
15. When the location of the leak has been determined, repair and re-run the leak check procedure.
16. If the leak is still present divide up the pneumatic system into discrete sections to locate the leak (refer to Section 9.5). When the location of the leak has been determined repair and then re-run the leak check procedure.
17. Slowly remove the blocker nut on the **BGnd Air Port**.
18. Allow the gauge to return to ambient. Inspect the internal tubing to ensuring that the tubing is cleanly connected to the fittings.
19. Remove the leak check jig.
20. Open - **Main Menu → Service Menu → Diagnostics Menu → Valve Menu**.
21. Enable - **Valve Sequencing → Enabled**.

Note: In this leak check procedure we have not checked the **Sample** and **Calibration** line.

6.4.4.1 Leak Check (Internal Pump Option)

Equipment Required

- Barometer
- Kynar 1/4" Blocker Nuts
- 5/8" Spanner
- 9/16" Spanner
- 7/16" Spanner

Procedure

Note: Ensure that the instrument has been running for at least one hour before this procedure is performed.

1. Disconnect all external tubing connected to the rear ports of the instrument.
2. Open - **Main Menu → Service Menu → Diagnostics Menu → Internal Pump Menu**.
3. Select - **Pump Control → Manual** - Accept.
4. Edit - **Coarse** - (set to 240) - Accept.
5. Edit - **Fine** - (set to 255) - Accept.
6. Open - **Main Menu → Service Menu → Diagnostics Menu → Valve Menu**.
7. Disable - **Valve Sequencing → Disabled**.
8. Off - **Sample/Cal → Off**.
9. Off - **Internal Zero/Cal → Off**.
10. Off - **Pressurized Zero (OPT) → Off**.
11. Off - **Pressurized Span (OPT) → Off**.

12. Refer to Figure 138. Locate the bypass DFU inside the chassis, between the PMT fan assembly and the dump, and block the DFU inlet.

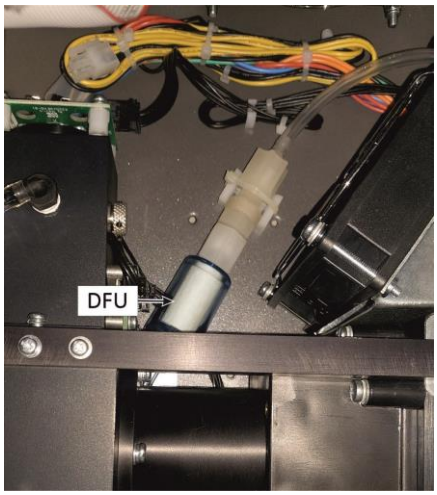

Figure 138 – Bypass DFU

13. Connect the barometer to **Sample Port**.
14. Allow the internal pump to time to evacuate the pneumatic system (the time required will depend on the condition of the pump 1 - 2 minutes).
15. Turn the manual stop valve 90° (Close).
16. Open - **Main Menu → Service Menu → Diagnostics Menu → Internal Pump Menu**.
17. Toggle Off - **Internal Pump → Off**.
18. Note the value on the barometer. Wait for three minutes, the value should not increase more than 5 kpa (37.5 torr). If the leak check passed skip to step 22.
19. Inspect the instrument's plumbing looking for obvious damage. Check the condition of fittings, sample filter holder plus the O-rings both in the filter assembly and in the reaction cell assembly.
20. When the location of the leak has been determined, repair and re-run the leak check procedure.
21. If the leak is still present divide up the pneumatic system into discrete sections to locate the leak (refer to Section 9.6). When the location of the leak has been determined repair and then rerun the leak check procedure.
22. Slowly remove the barometer from the **Sample Port** and allow the instrument to return to ambient.
23. Remove the blocker from the bypass DFU.
24. Turn the manual stop valve 90° (Open).
25. Open - **Main Menu → Service Menu → Diagnostics Menu → Valve Menu**.
26. Enable - **Valve Sequencing → Enabled**.
27. Open - **Main Menu → Service Menu → Diagnostics Menu → Internal Pump Menu**.
28. Select - **Pump Control → START** - Accept.

Note: In this leak check procedure we have not checked the **BGnd Air** and **Calibration** line.

6.4.5 Replacing the PMT Desiccant Packs

The PMT housing contains two desiccant packs to prevent condensation on the PMT cold block. If the desiccant expires it will result in premature cooler failure. It is recommended that the desiccant bags be changed at least annually. If moisture is detected inside the housing or the desiccant packs are saturated the interval should be reduced. To change the desiccant packs follow the instructions below:

CAUTION

Because the PMT is extremely sensitive to light, it is essential that before opening the PMT assembly to make sure that the instrument is switched OFF.

In addition, even when the instrument is switched OFF it is very important to cover the PMT at all times so that no direct light reaches its window.

Equipment Required

- Phillips Head Screwdriver
- New Desiccant Packs
- Tweezers

Procedure

1. Turn the instrument OFF and disconnect the power. Wait 15 min for the cold block to warm up.

Note: The amount of time required for the cold block to warm up will need to be increased in humid environments as the dew point will be at a higher temperature. Check and take into consideration your local dew point before proceeding.

2. Refer to Figure 139. Using an Phillips head screwdriver, remove the desiccant pack access cap from the PMT housing.

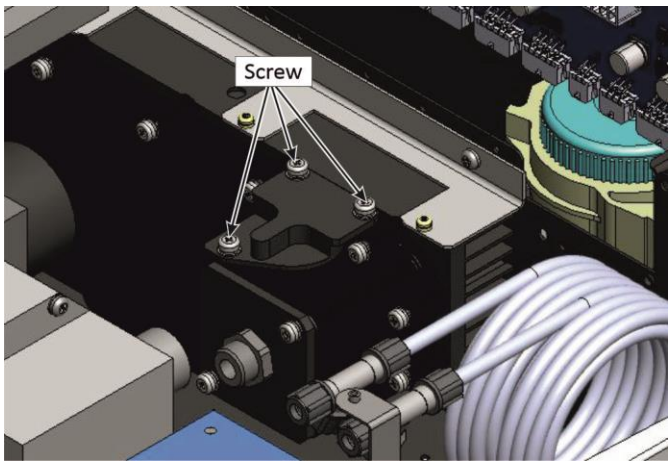

Figure 139 – Remove Desiccant Access Cap

3. Remove the old desiccant packs and replace with new ones. Do not attempt to dry and reuse the old packs.
4. Inspect the inside of the PMT housing (by touch or with an inspection mirror) to check for moisture inside the housing. If moisture is detected inside the housing or the desiccant packs are saturated, the desiccant packs should be replaced more frequently.

5. Reinstall the desiccant cap by gently twisting and pressing the cap back into the PMT housing. It may help to apply a small amount of lubricant to the O-ring on the desiccant cap. Secure with two screws.



CAUTION

Do not attempt to use the fastening screws to push the desiccant cap in place in the PMT housing. This will damage the O-ring.

6. Reconnect power and restart the instrument.

Note: Removal of the desiccant access cap may be easier if the Rx cell/PMT housing is removed from the instrument.

6.4.6 Replace Zero Air Scrubber

Equipment Required

- Flat Screwdriver

Procedure

1. Turn OFF the external pump and allow the instrument to return to ambient.
2. Open the lid of the instrument.
3. Refer to Figure 140. Loosen the compression nut and remove the tubing from the fitting on top of the scrubber.

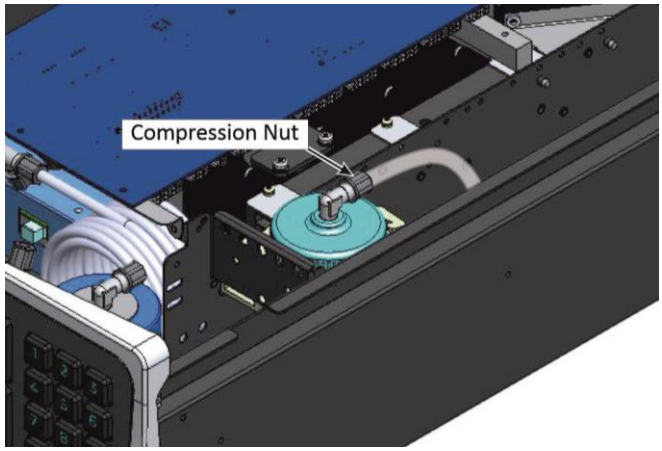

Figure 140 – Remove the Tubing

4. Refer to Figure 141. Remove the Kynar nut and pull-out the DFU from the fitting below the scrubber.

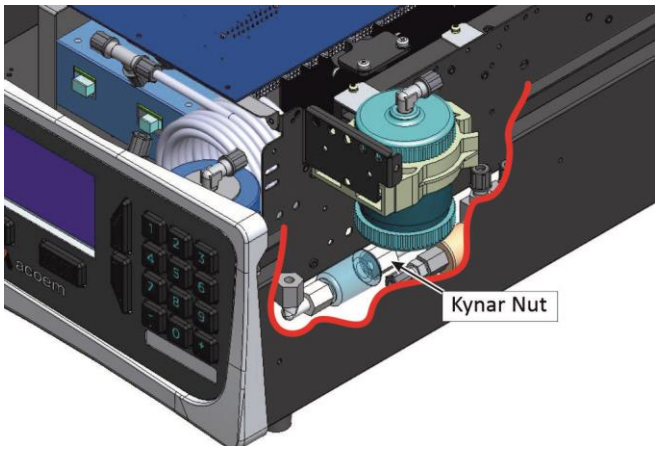

Figure 141 – Pull-out the DFU

5. Refer to Figure 142. Open the scrubber holder with a screwdriver.



Figure 142 – Zero Scrubber Removal

6. Replace the zero air scrubber.
7. Perform a leak check (refer to Section 6.4.4).
8. Perform a manual background (refer to Section 5.3).
9. Perform a zero and span calibration (refer to Section 5.4 and Section 5.5).

Table 8 – Zero Air Scrubber Replacement Frequency

Average SO_2 Concentration	Charcoal Replacement Frequency
0 - 30 ppb	12 Months
30 - 100 ppb	6 Months
> 100 ppb	1 Month

6.4.7 Orifice Replacement

Equipment Required

- Orifice Removal Tool (PN: H010046)
- Teflon Tape
- 5/8” Spanner

Procedure

1. Turn OFF the external pump and allow the instrument to return to ambient.
2. Turn OFF the instrument and disconnect the pump.
3. Refer to Figure 143. Disconnect the tubing from the tee fitting on top of the dump of the reaction cell. Disconnect the tubing from the dump tee fitting on top of the dump.

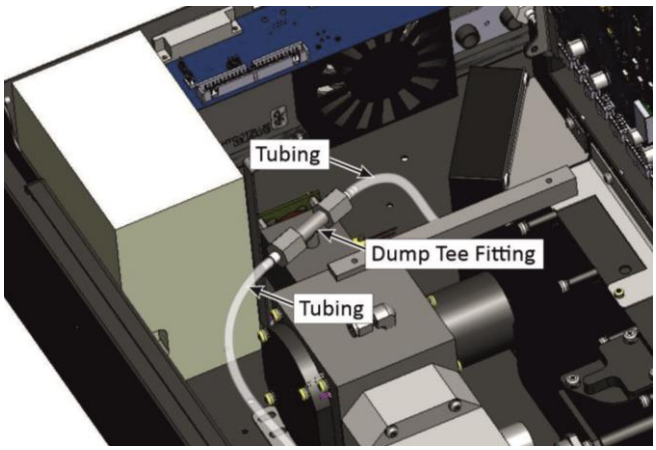

Figure 143 – Reaction Cell Tee Fitting

4. Remove the Kynar nuts to access the tee fitting.
5. Remove the tee fitting from the dump by turning it counter-clockwise.
6. Remove both the orifice by screwing in the orifice removal tool (finer thread end) clockwise, then gently pull the orifice out of the tee fitting.
7. The orifices may be exchanged with new ones or cleaned as needed.
8. Refer to Figure 144. Replace the orifice(s) in the correct part of the Tee fitting (#12 in the bottom of the tee fitting and #20 in the side).

Note: The orifice number is stamped on the base of the orifice.

Note: Do not insert the Orifice too far into the fitting (i.e. not past the top thread of the Kynar fitting).

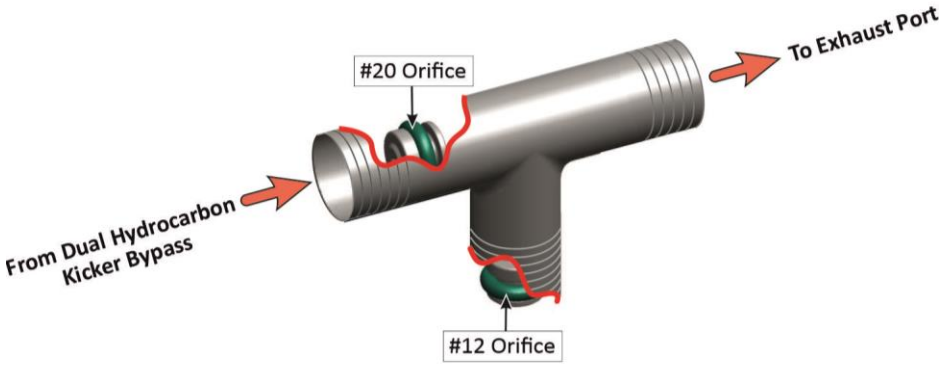

Figure 144 – Orifice Location

9. Apply Teflon tape to the thread of the tee fitting and replace it in the dump by turning it clockwise.
10. Replace the Kynar nuts to each end of the tee fitting.
11. Power up the instrument and allow it to complete the warm-up sequence.
12. Perform a leak test (refer to Section 6.4.4).
13. Reconnect the external pump and perform a flow check.
14. Perform a manual background (refer to Section 5.3).
15. Perform zero and span calibrations (refer to Section 5.4 and Section 5.5).

6.4.8 UV Lamp Replacement

Proper operation of the UV lamp is essential to the Serinus 50. The UV lamp should be checked every six months to ensure it is operating within acceptable parameters and may require realignment or replacement to maintain sufficient UV light for instrument operation. The UV lamp will need to be adjusted only when the **Ref. Gain Pot** goes above 100 or below 5. Following are procedures to check align and replace the UV lamp assembly.

CAUTION

Acoem Australasia recommends the use of UV protective glasses when adjusting the UV lamp.

CAUTION

The Lamp Driver PCA can generate in excess of 1000 volts. Exercise extreme care when working in the vicinity of the Lamp Driver.

CAUTION

If the UV lamp is adjusted, the instrument will require recalibration.

Equipment Required

- UV Protective Glasses

Procedure

1. Turn OFF the external pump and allow the instrument to return to ambient.
2. Refer to Figure 145. Loosen the collets at each end of the lamp.

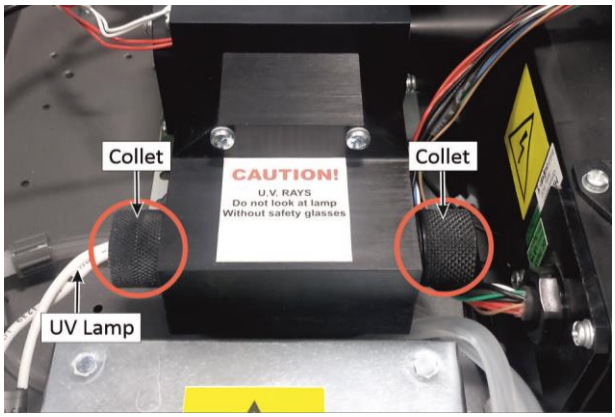

Figure 145 – Collets of the UV Lamp

3. Pull-out the UV lamp and carefully replace it with the new UV lamp.
4. Align the UV lamp, refer to Section 6.4.8.1.

6.4.8.1 UV Lamp Alignment

CAUTION

Acoem Australasia recommends the use of UV protective glasses when adjusting the UV lamp.

CAUTION

The Lamp Driver PCA can generate in excess of 1000 volts. Exercise extreme care when working in the vicinity of the Lamp Driver.

CAUTION

If the UV lamp is adjusted, the instrument will require recalibration.

Equipment Required

- Oscilloscope
- UV Protective Glasses

Procedure

1. Turn the instrument ON and allow the UV lamp to warm-up and stabilise (about 30 minutes).
2. Refer to Figure 146. Connect an oscilloscope to TP19 (SO2REFX2) and TP1 (AGND) on top of the main controller PCA.

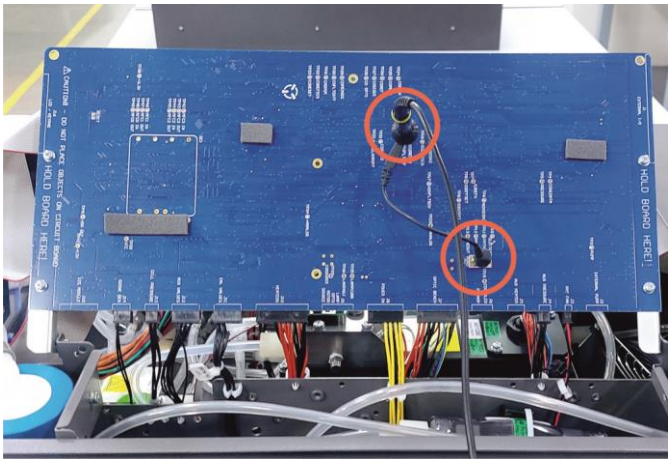

Figure 146 – Connect Oscilloscope

3. Adjust the oscilloscope for 0.5 V/division and 20 msec/division.
4. Refer to Figure 147. Loosen the collets (do not remove) at each end of the lamp.

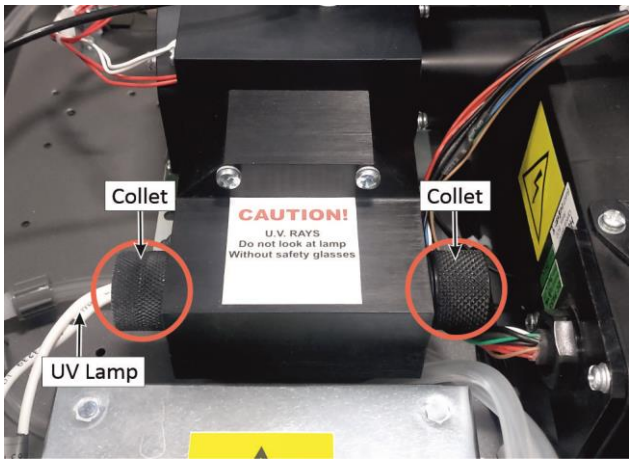

Figure 147 – Collets of the UV Lamp

CAUTION

The UV lamp can be damaged if an adjustment is attempted without loosening the collets.

5. Physically adjust the UV lamp (rotate and move left and right) until the maximum peak voltage on the oscilloscope is obtained. The minimum usable output from the lamp is approximately 0.8 volts amplitude (peak to peak). If the UV lamp output is below 1.0 volts, replacement should be considered.
6. Tighten the UV lamp collets and verify the UV lamp has remained at its previously adjusted position.
7. Reset the instrument and allow it to run a warm-up sequence.
8. Perform zero and span calibrations (refer to Section 5.4 and Section 5.5).

6.4.9 Clean Pneumatics

The calibration valve manifold will require disassembling and cleaning. Ideally the valves and the manifold should be cleaned in a sonic bath with lab detergent and water. Once clean, rinse with distilled water and dry with clean dry oil free air before reassembling (refer to Section 9.16 and Section 9.18). A leak test should be performed once the instrument is ready for operation (refer to Section 6.4.4).

If the tubing shows signs of significant contamination, it should be replaced with new tubing (refer to Section 9.3 for tubing part number and Section 9.5 for tubing lengths).

6.4.10 Pressure Sensor Check

Pressure checks are needed to ensure that the pressure sensor is accurately measuring pressure inside the instrument.

During normal operation ensure that the **Pressure & Flow Menu** indicate the following parameters. Ambient should display the current ambient pressure at site. Cell should indicate current cell pressure. Depending on the pump condition and location, a value of between 30 - 40 torr below ambient pressure is recommended.

Equipment Required

- Barometer
- Digital Multimeter (DMM)

Procedure

1. Open - **Main Menu → Analyser State Menu → Pressure & Flow Menu**.
2. Turn OFF the vacuum pump and allow the instrument to return to ambient.
3. Disconnect all external tubing connected to the rear ports of the instrument.
4. After two - five minutes observe the pressure readings: ambient and cell. Ensure that they are reading the same ± 3 torr (± 0.4 kPa).
5. If the readings are outside this level, perform a pressure calibration (refer to Section 5.2.2).

If the calibration fails the instrument may have a hardware fault. The cell pressure PCA has test points. To determine if the pressure sensor is faulty simply measure the voltage on the test points, refer to Figure 148 and Figure 149. The voltage measured across the test point is proportional to the pressure measured by the sensor so if the sensor is exposed to ambient pressure at sea level the voltage will be around 4 volts but if the sensor is under vacuum the voltage will be low (e.g. 0.5 volts). If the test point measures zero or negative voltage the assembly is most likely faulty and will need to be replaced.



Figure 148 – Test Point Location



Figure 149 – Typical Test Point Reading of Cell Pressure Sensor

6.5 Bootloader

The Serinus Bootloader is the initial set of operations that the instruments' microprocessor performs when first powered up (similar to the BIOS found in a personal computer). This occurs every time the instrument is powered up or during instrument resets. Once the instrument boots up, it will automatically load the instruments' firmware. A service technician may need to enter the Bootloader to perform advanced microprocessor functions as described below.

To enter the Bootloader turn OFF the power to the instrument. Press and hold the plus key while turning the power ON. Hold the Plus key until the following screen appears.

```
Gas Analyser / Calibrator
V3.4.0 Bootloader
Press '1' to enter Bootloader
```

If the instrument displays the normal start up screen, the power will need to be toggled and another attempt will need to be made to enter the Bootloader. Once successful, press 1 to enter the **Bootloader Menu**.

6.5.1 Display Help Screen

Once in the Bootloader screen it is possible to redisplay the help screen by pressing 1 on the keypad.

6.5.2 Communications Port Test

This test is very useful for fault finding communication issues. It allows a communication test to be carried out independent to any user settings or firmware revisions.

This command forces the following communication ports to output a string of characters: Serial Port RS232 #1, USB rear and Ethernet Port. The default baud rate is 38400 for the RS232 Serial Port. To initiate the test press the number 2 key from the Bootloader screen.

6.5.3 Updating Firmware

It is important for optimal performance of the instrument that the latest firmware is loaded. The latest firmware can be obtained by visiting Acoem Australasia's website:

http://www.ecotech.com/downloads/firmware

Or by emailing Acoem Australasia at service@ecotech.com or support@ecotech.com.

To update the firmware from a USB memory stick, use the following procedure:

Procedure

1. Turn the instrument OFF.
2. Place the USB memory stick with the new firmware (ensure that firmware is placed in a folder called FIRMWARE) in the front panel USB Port.
3. Enter the Bootloader (refer to Section 6.5).
4. Select option 3 (upgrade from USB memory stick), press 3 on the keypad.
5. Wait until the upgrade has completed.
6. Press 9 on the keypad to start the instrument with new firmware.

6.5.4 Erase All Settings

This command is only required if the instrument's firmware has become unstable due to corrupted settings. To execute this command enter the **Bootloader Menu** (refer to Section 6.5) and press 4 on the keypad.

6.5.5 Start Analyser

The start analyser command will simply initiate a firmware load by pressing 9 on the keypad from the **Bootloader Menu**. It is generally used after a firmware upgrade.

This page is intentionally blank.

7. Troubleshooting

Before troubleshooting any specific issues, Acoem Australasia recommends ensuring the instrument has successfully completed its warm-up routine and resolving all issues listed in the instrument status menu (refer to Section 3.4.4).

Table 9 – Common Errors and Troubleshooting

Error Message/Problem	Cause	Solution
Flow fault	Multiple possibilities	Refer to Section 7.1.
	Pump failed	Replace the internal or external pump.
	Blocked filter or orifice	Replace particulate filter or orifice (refer to Section 6.4.1 or 6.4.7).
	Pressurised reaction cell	Ensure sample and zero inlets are maintained at ambient pressure. Ensure that the vacuum pump is connected correctly.
	Pressure sensors	Check pressure voltages displayed in pressure calibration menu both the ambient and cell voltage should equal 4 volts ± 0.5 (at sea level). Perform a pressure calibration (refer to Section 5.2).
Noisy/unstable readings	Multiple possibilities	Refer to Section 7.2.
	Calibration system error	Ensure calibration system is functioning correctly and is leak free. Ensure sufficient gas is available for instrument and an adequate vent is available for excess gas.
	Leaks	A leak in the instrument or calibration system dilutes the sample stream and causes low span readings and noise.
	Lamp not correctly positioned	Adjust the UV lamp. If you are unable to obtain an acceptable reading, replace the lamp (refer to Section 6.4.8).
	TE cooler or Reaction cell heater	A failed temperature control allows the instrument to drift with ambient temperature. Verify that the cell temperature is 50 °C ± 3 and that the TE cooler is 13 °C ± 2.
	Hardware fault	Faulty measurement cell component.
	Gain too high	Leak check (repair any leaks refer to Section 6.4.4). UV lamp filter in reaction cell deteriorated - replace. PMT voltage too low less than 700 V. UV lamp requires replacing (refer to Section 6.4.8).

	PMT temperature too high (> 15 °C)	Check PMT fan is operating. Check chassis temperature is < 48 °C. Check PMT cooler is operational and correct amount of thermal paste is applied.
	Reference gain digital potentiometer out of normal range	Check value in menu (refer to Section 3.4.15). If out of normal range, replace UV lamp and/or UV lamp filter.
Electronic zero adjust	Faulty zero air or contaminated cell/pneumatics	Refer to Section 7.3.
Cell temperature failure	Faulty heater or temperature sensor	Refer to Section 7.4.
Instrument resetting	Multiple possibilities	Check that the instrument is not overheating. Possibly a faulty power supply. Electrical issue component shorted to ground. Corrupted firmware, perform an '**Erases all settings'** in the **Bootloader Menu** and reload or upgrades firmware (refer to Section 6.5.4).
12 Voltage supply failure	Power supply has failed	Replace power supply.
No display	AC power	Verify that the mains power cable is connected and the rear power supply fan is operating.
	Contrast misadjusted	Adjust the display contrast by pressing one of two keys on the front panel: Press Up arrow (▲) for darker contrast Press Down arrow (▼) for lighter contrast Note: Must be in the home screen
	DC power	Verify that the power supply is providing the correct DC voltages: +12 V (TP34), -12 V (TP23) & +5 V (TP39) DC.
	Display	Check the interface cable between the display and the main controller PCA (J16)
	Bad display or Main controller PCA	Replace the front panel display Replace the main controller PCA. Bad cables are unlikely, but if you suspect it, perform a pin-for-pin continuity test using an ohmmeter.
Sample pressure too high or low	Loss of pressure calibration	Perform a pressure calibration (refer to Section 5.2). Ensure particulate filter has been recently changed. Ensure tubing is not kinked or blocked. Ensure vacuum pump is correctly installed and operating.
Sample flow not equal to 0.75 slpm (External pump model)	Multiple possibilities	Check/replace sample filter. Check pump.

		Check valves. Check/replace orifice. Re-calibrate pressure sensors.
Unstable flow or pressure readings	Faulty pressure sensors	Check pressure transducer calibration. Check calibration valve assembly is functioning and not blocked. If unable to diagnose problem, check voltage across TP1 and TP2 of pressure PCA ensure it is about 3.5 volts ± 0.3 volts. If unable to diagnose problem, it may be a noisy A/D converter, replace main controller PCA.
Low span	Leaks	A leak in the instrument or calibration system dilutes the sample stream and causes low span readings and noise.
	Span calibration out	Adjust the span using the calibration procedure (refer to Section 5.5).
	Faulty lamp	Replace UV lamp (refer to Section 6.4.8).
No response to span gas	Leaks/blockages	Leak or blockages in tubes or valves. Perform leak check and flow check and repair any leaks/blockages.
	Faulty calibration source	Ensure calibration gas is plumbed correctly, is not contaminated, has no leaks and is a certified reference gas.
Zero drift	Poor temperature control	Ensure instrument is operated in a temperature controlled environment with the lid on.
	Charcoal contaminated	Replace the charcoal in the scrubber feeding the background port.
	Faulty zero air	Ensure zero air sources have been maintained.
	Leak	Perform leak test.
Negative response	Internal scrubber	Charcoal scrubber contaminated. Replace charcoal and preform a leak check (refer to Section 6.4.4).
Input pot limited to 0 or 255	Damaged lamp	Check that lamp current is 35 mA. If it is not 35 mA replace the Lamp driver PCA. If the pot is still 255, replace UV lamp.

7.1 Flow Fault

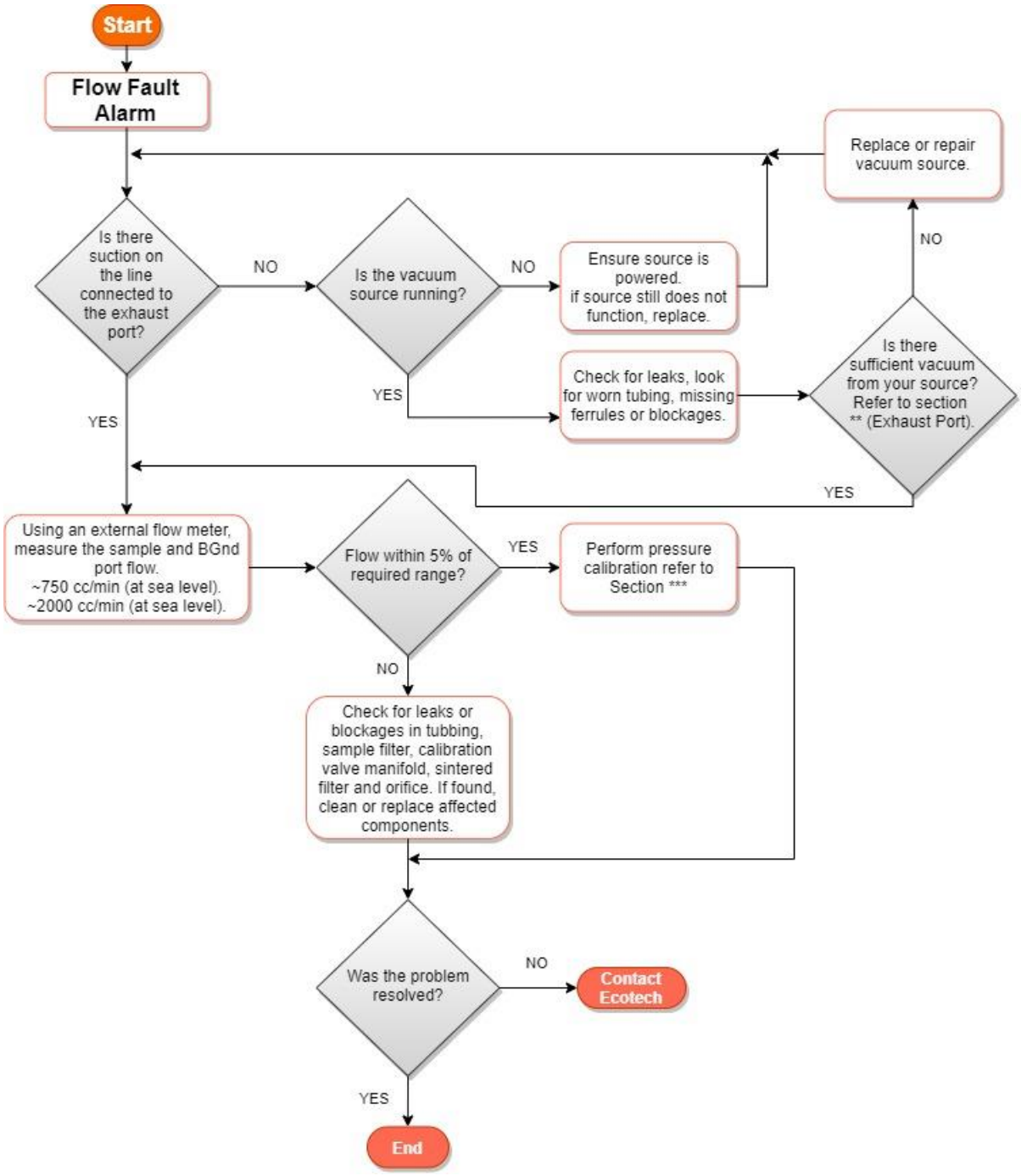

Figure 150 – Flow Fault Diagnostic Procedure

** Section 2.3.2

*** Section 5.2

7.2 Noisy/Unstable Readings

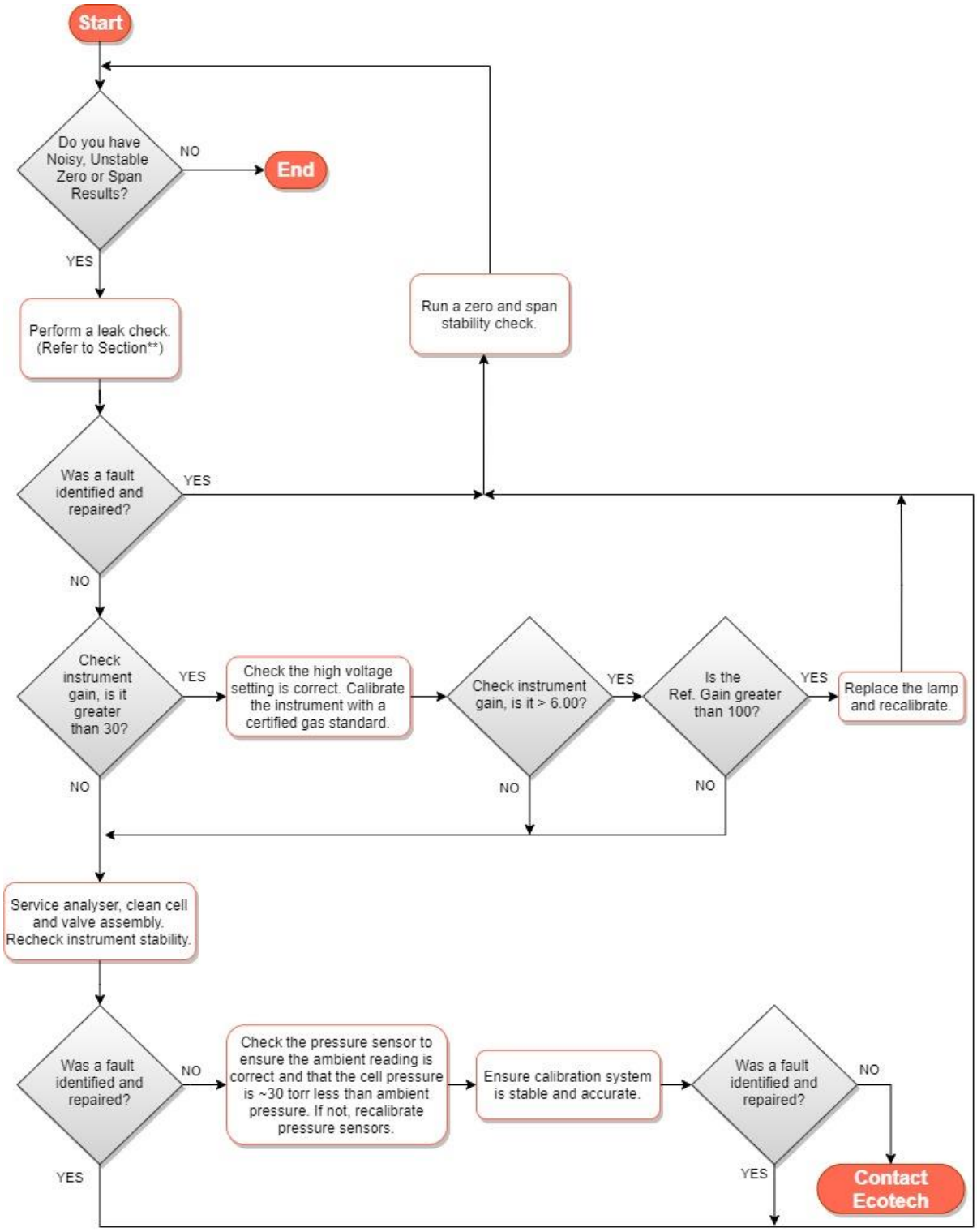

Figure 151 – Noisy or Unstable Zero or Span Results

** Section 6.4.4

7.3 Electronic Zero Adjust

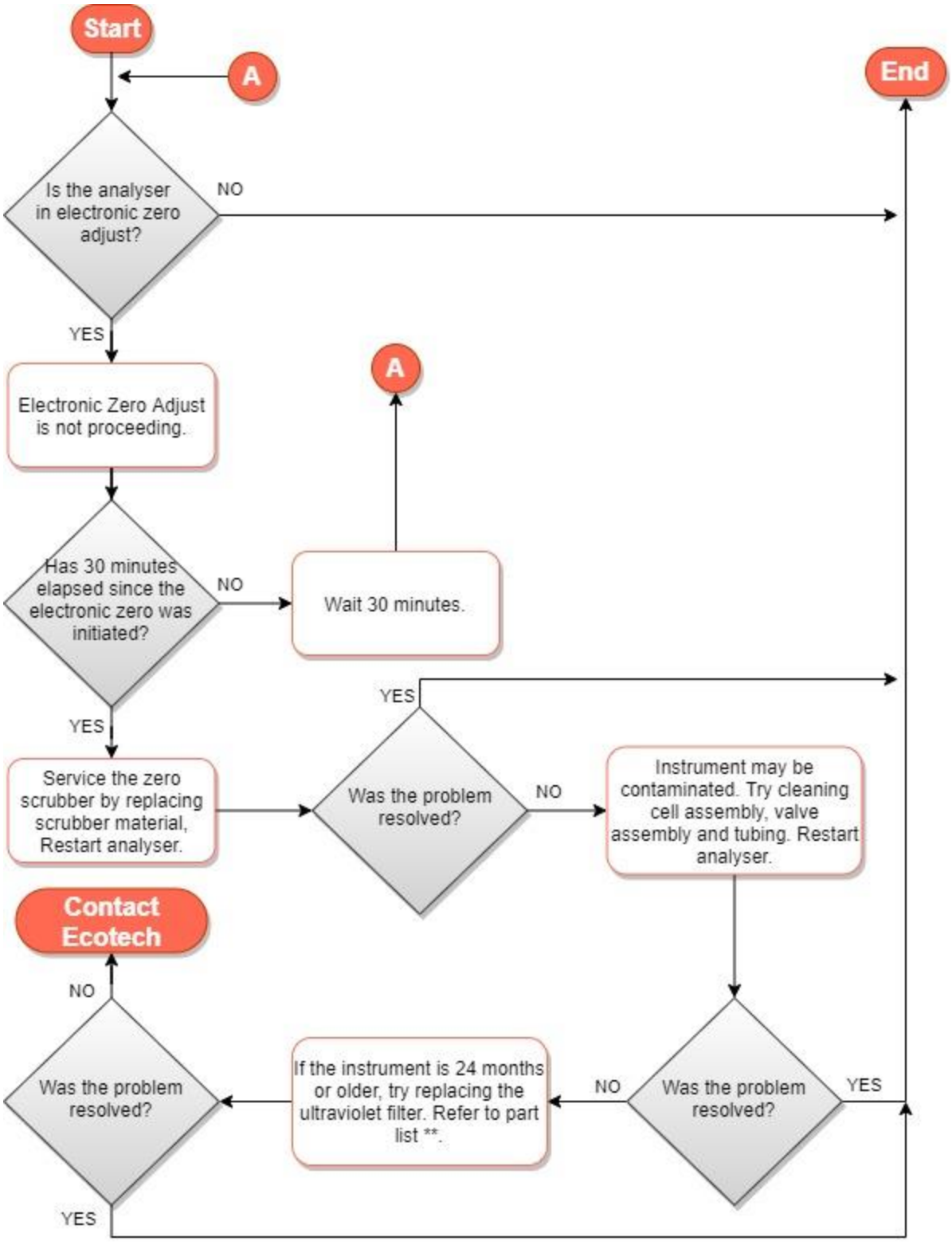

Figure 152 – Troubleshooting, Electronic Zero Adjust

** Section 9.4 - Instrument Parts List

7.4 Reaction Cell Temperature Failure

Note: This process assumes that the temperature set point is 50 °C.

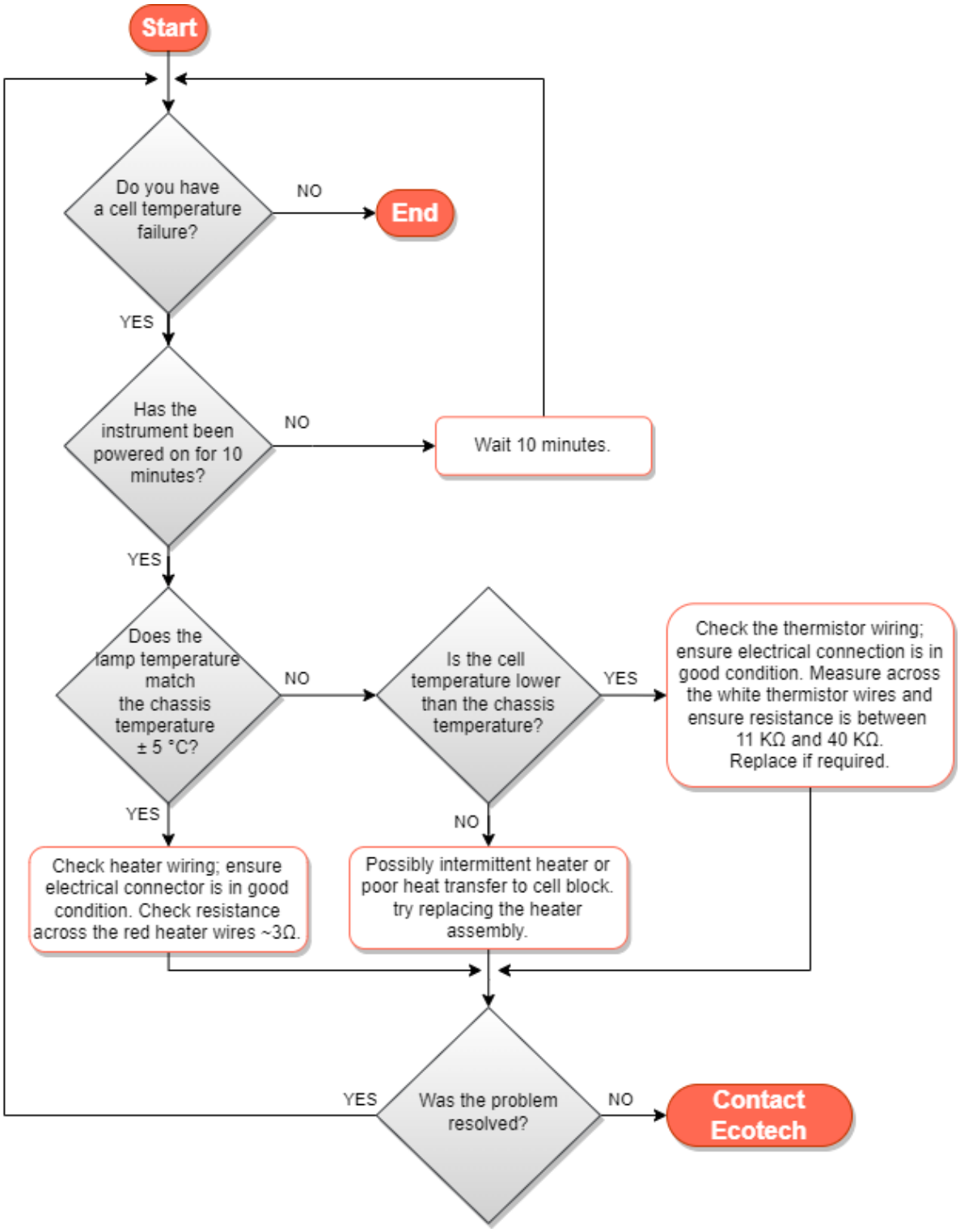

Figure 153 – Troubleshooting, Reaction Cell Temperature Failure

7.5 USB Memory Stick Failure

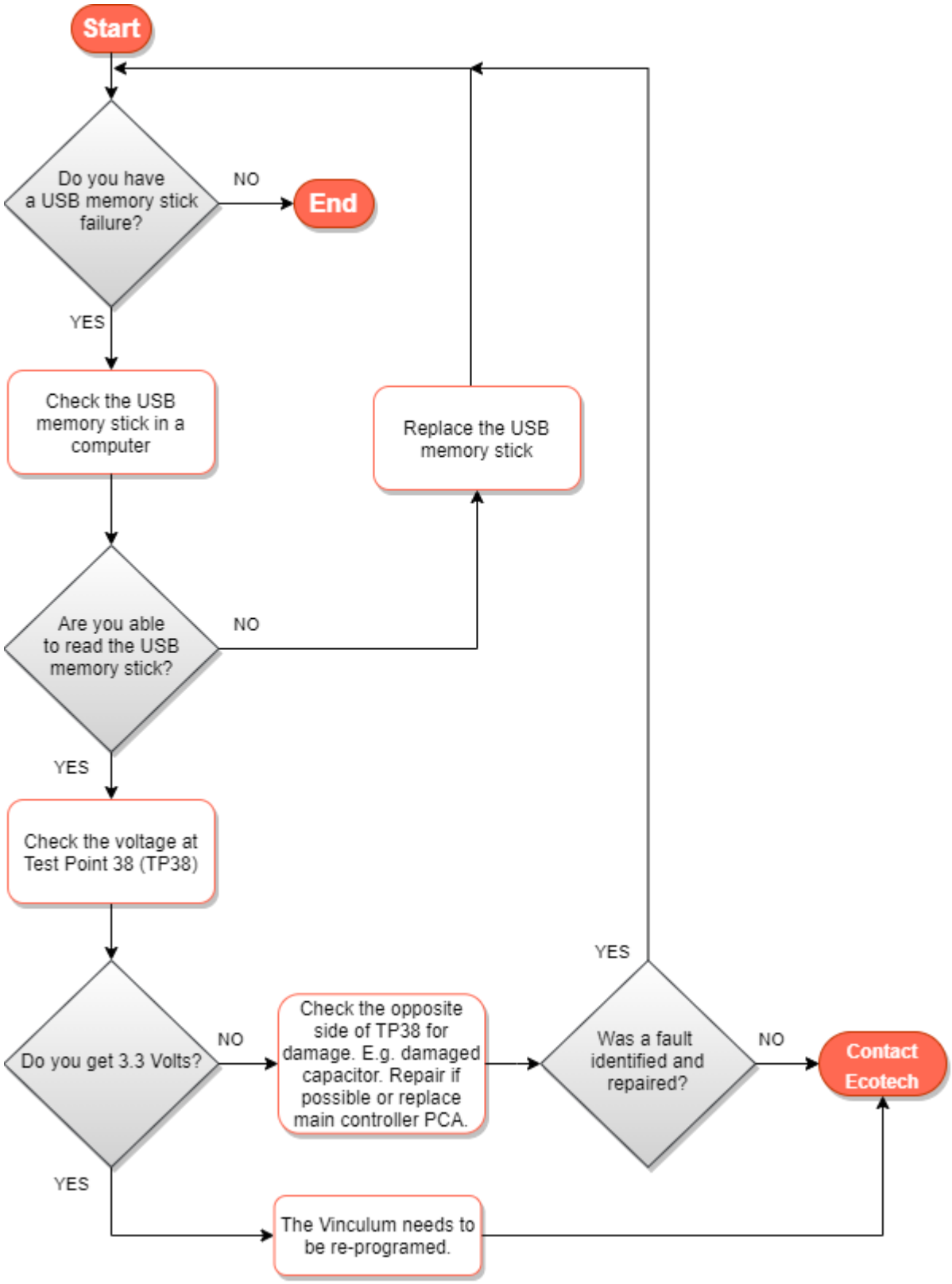

Figure 154 – USB Memory Stick Failure

7.6 Technical Support Files

Regular backup of the settings, parameters and data on the instruments USB memory stick is recommended.

In the event of a fault that requires Acoem Australasia technical support, make copies of the following files and email to: **support@ecotech.com**

Equipment Required

- PC/Laptop

Procedure

State the ID number, model, board revision and firmware version of the instrument with a brief description of the problem. Take a copy of the current configuration if possible and a save of the parameters.

1. Open - **Main Menu → Analyser State Menu**.
2. **Model** - (take note).
3. **Ecotech ID** - (take note).
4. **Board Revision** - (take note).
5. **Firmware Ver.** - (take note).
6. Open - **Main Menu → Service Menu**.
7. Save - **Save Configuration** - (CONFIG**.TXT) - Accept.

Note: CONFIG99.TXT is the "Factory Backup" file, this is the configuration of the instrument as it left the factory. It is recommended that this file is kept unchanged but can be used as a reference backup point.

** Can be any number from 0 - 98.

8. Save - **Save Parameter List** - (PARAM**.TXT) - Accept.
9. Eject - **Safely Remove USB Stick** - (Follow instructions).

Note: PARAM99.TXT is the "Factory Backup" file, This is a snap shot of the parameters while it was under test in the factory just prior to release. It is recommended that this file is kept unchanged but can be viewed for reference.

** Can be any number from 0 - 98.

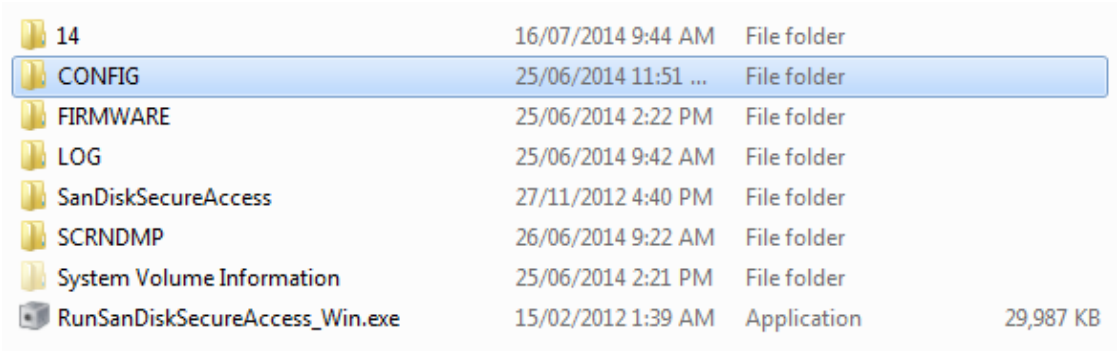

Figure 155 – USB Memory Stick File Structure

10. Insert the USB memory stick into PC/Laptop computer and access the files.
11. Best practice is to email all the on the USB memory stick but if it's to large just send:
12. The CONFIG**.TXT and PARAM**.TXT files that are saved in the CONFIG folder.
13. The LOG files (Event Log text files) and data files (14=Year, Sub folder=month).
14. Safely Eject the USB from the PC/Laptop and return to the instrument.

8. Optional Extras

This section contains information on optional kits and installed options.

Dual Sample Filter	Refer to Section 8.1.
Test Lamp	Refer to Section 8.2.
Network Port	Refer to Section 8.3.
Rack Mount Kit	Refer to Section 8.4.
Internal Pump	Refer to Section 8.5.
Metric Fittings Kit	Refer to Section 8.6.
Internal Zero and Span	Refer to Section 8.7.
High Pressure Zero/Span Valves	Refer to Section 8.8.
Trace Level Instrument	Refer to Section 8.9.

8.1 Dual Sample Filter (PN: E020100)

The dual filter is designed with two sample filters plumbed in parallel with a split line. This formation allows sample flow not to be affected, yet reduces the loading on each filter and therefore the frequency with which they will need to be changed.

Table 10 – Dual Sample Filter Parts Added

Part Description	Quantity	Part Number
Sample Filter Holder	1	H010160
1/4T Union Tee Fitting	2	F030210-01
1/4T Suit Compression Ferrule	6	F030203-01
1/4T Compression Fitting Nut	6	F030202-01

The dual filter option is shown in the pneumatic diagram (dashed line) and requires no operational changes to the instrument (refer to Section 9.5).

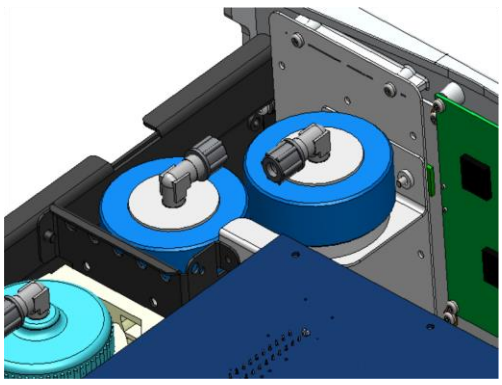

Figure 156 – Dual Filter Option Installed

8.2 Test Lamp (PN: E020103)

The test lamp can be used to diagnose a problem within the measurement cell specifically the function of the PMT. The test lamp is used in the **Main Menu → Service Menu → Diagnostics Menu → Digital Pots Menu** by changing the **Diagnostic Mode** to **Optic** (refer to Section 3.4.15). If you have this option installed you need to make sure it is enabled in the **Hardware Menu** before the feature can be used.

An example of using the Optic diagnostic feature is when running a span point if you get no response from the instrument the Optic diagnostic feature can be used to divide up the system and verify that the lack of response is not due to a failure of the measurement cell but more likely a failure of the assemblies leading up to calibration system. If you get a response from the instrument regardless of the concentration then the PMT is functioning and can be ruled out as the cause of the problem.

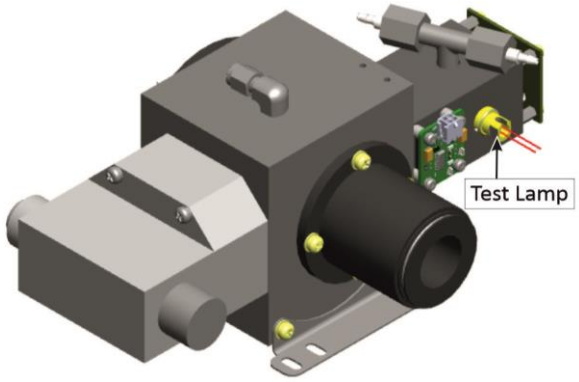

Figure 157 – Test Lamp

Table 11 – Test Lamp Parts Added

Part Description	Quantity	Part Number
Test Lamp	1	C020068-01
Quartz Window	1	H010002

Table 12 – Test Lamp Parts Removed

Part Description	Quantity	Part Number
Test Lamp Plug	1	H010026

8.3 Network Port (PN: E020101)

The network port option allows the user to setup and connect to a range of TCP/IP network options. If the user has this option installed they need to make sure it is enabled in the **Hardware Menu** before the feature can be used.

Table 13 – Network Port Parts Added

Part Description	Quantity	Part Number
Rear Panel PCA (Network Port)	1	C010002

Table 14 – Network Port Parts Removed

Part Description	Quantity	Part Number
Rear Panel PCA	1	C010002-01
Rectangular Blanking Plug	1	H010067

- Refer to Section 3.4.29, for details on the network menu.
- Refer to Section 4.3, for details on network setup.

8.3.1 Hardware Setup

This procedure will need to be followed after a factory reset.

Procedure

1. Press - (the green instrument status light button), this will take the user to the home screen.
2. Press - (-99+) on the keypad. This will open the **Advanced Menu**.
3. **Open - Advanced Menu → Hardware Menu**.
4. Enable - **Network Port → Enabled**.

8.4 Rack Mount Kit (PN: E020116)

The rack mount kit is necessary for installing the Serinus into a 19” rack (the Serinus is 4RU in height).

Table 15 – Rack Mount Kit Parts Added

Part Description	Quantity	Part Number
Rack Slide Set	1	H010112
Rack Mount Adaptors	4	H010133
Rack Mount Ears	2	H010134
Spacers	4	HAR-8700
M6 x 20 Button Head Screws	8	
M6 Washers	16	
M6 Nyloc Nuts	8	
M4 x 10 Button Head Screws	18	
M4 Washers	8	
M4 Nyloc Nuts	8	
M6 Cage Nuts	8	

Installing the Instrument

Procedure

1. Remove the rubber feet from the instrument (if attached).
2. Refer to Figure 158. Separate the slide rail assembly by pressing the black plastic clips in the slide rails to remove the inner section of the rail.

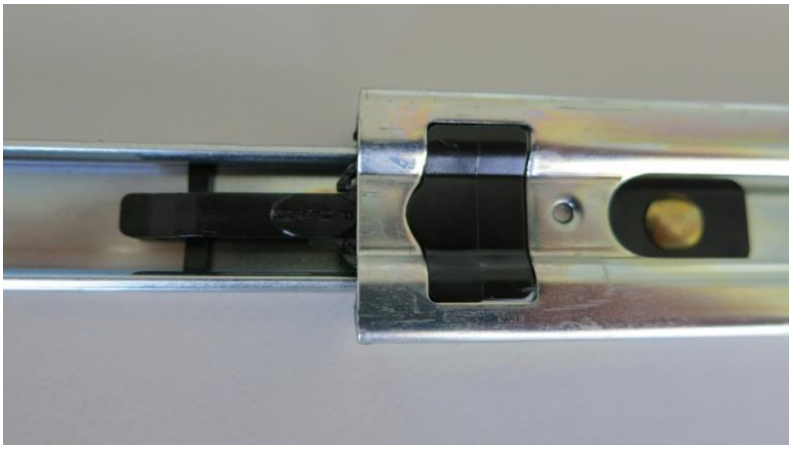

Figure 158 – Separate Rack Slides

3. Refer to Figure 159. Attach the inner slide rails to each side of the instrument using M4 x 10 button screws; three on each side.



Figure 159 – Assemble Inner Slide on Chassis

4. Refer to Figure 160. Install rack mount ears on the front of the instrument using two M4 x 10 screws on each side.



Figure 160 – Rack Mount Ears Fitted to Instrument

5. Refer to Figure 161. Attach the rack mount adaptors to the ends of the outer slide rails using M4 x 10 button screws, washers and locknuts. Do not fully tighten at this stage as minor adjustments will be required to suit the length of the rack.



Figure 161 – Attach Rack Mount Adaptors to Outer Slides

6. Refer to Figure 162. Test fit the rack slide into your rack to determine the spacing of the rack mount adaptors.

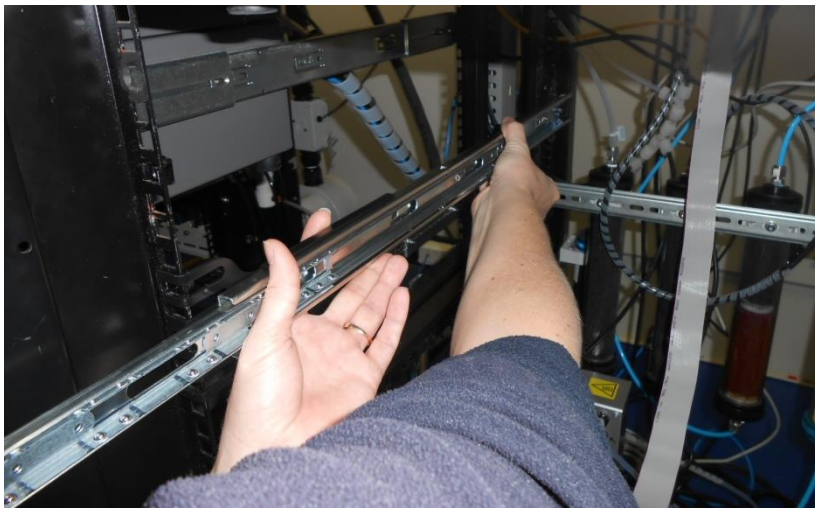

Figure 162 – Test Fit the Rack Slide Assembly into your Rack

7. Refer to Figure 163. Install the two assembled outer slide rails onto the left and right side of the rack securely with M6 bolts; washer and locknuts/cage nuts.

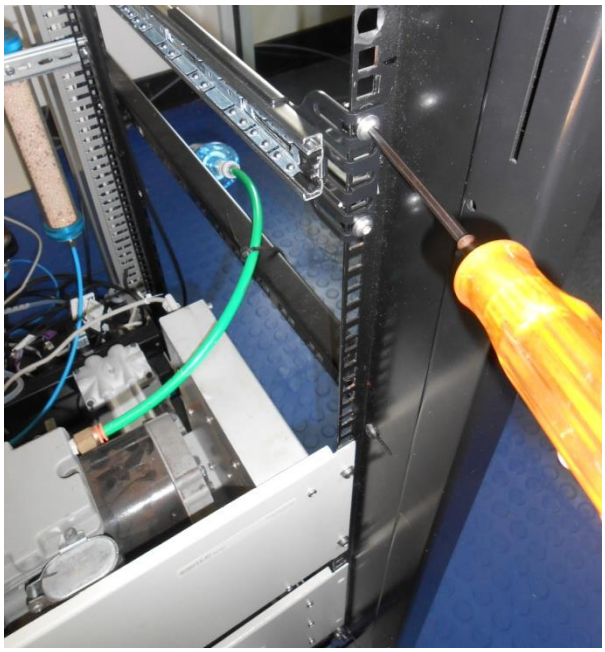

Figure 163 – Attach Slides to Front of Rack

8. Now carefully insert the instrument into the rack by fitting the instrument slides into the mounted rails. Ensuring that the rack slide locks engage on each side (you will hear a click from both sides).

CAUTION

When installing this instrument ensure that appropriate lifting equipment and procedures are followed. It is recommended that two people lift the instrument into the rack due to the weight, unless proper lifting equipment is available.

Note: Ensure both sides of the inner slide are attached to the outer slides before pushing into the rack fully.

9. Push the instrument into the rack. Adjust and tighten the screws as required to achieve a smooth and secure slide.

To Remove the Instrument

1. To remove the instrument first pull instrument forward of rack giving access to the slides.
2. Refer to Figure 164. Find the rack slide lock labelled **Push** and push it in whilst sliding the instrument out of the rack, complete this for both sides while carefully removing instrument.

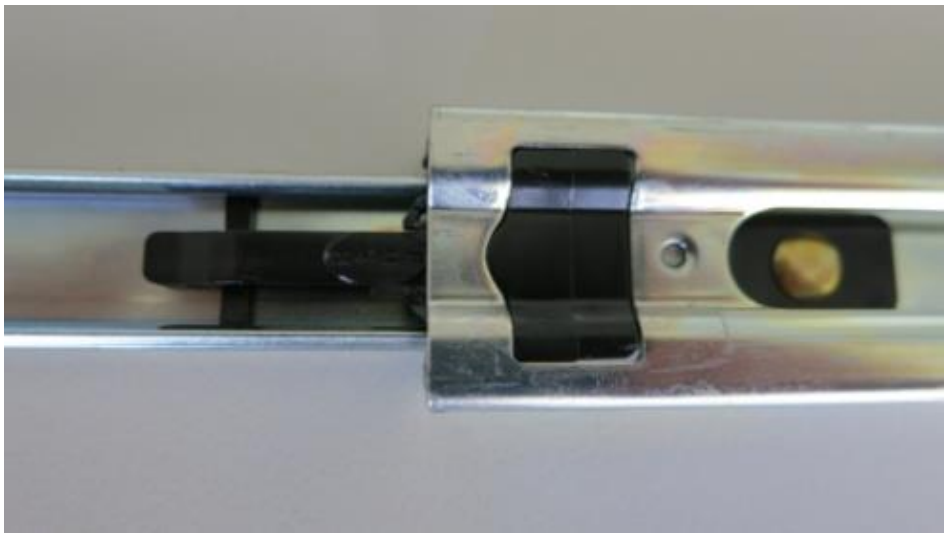

Figure 164 – Slide Clips

8.5 Internal Pump (PN: E020106)

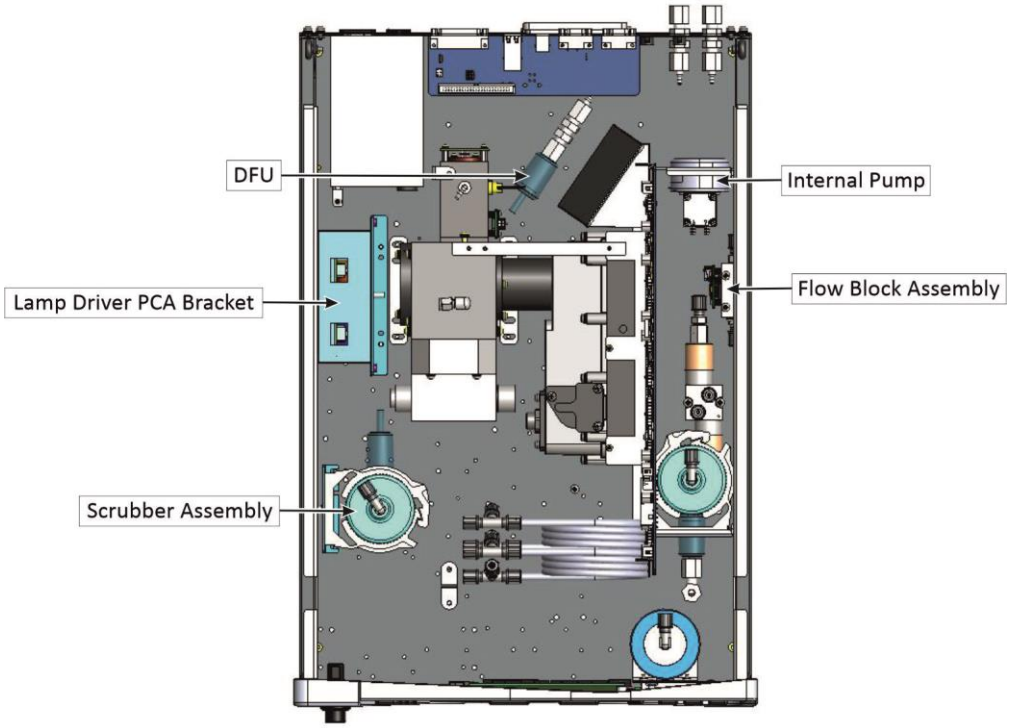

Figure 165 – Internal Pump Option

8.5.1 Hardware Setup

This procedure should be followed after a factory reset:

Procedure

1. Press - (the green instrument status light), to return to the home screen.
2. Press - (-99+) on the keypad to open the **Advanced Menu**.
3. Open - **Advanced Menu → Hardware Menu**.
4. Enable - **Internal Pump → Enabled**.

8.5.2 Internal Pump Pneumatic

Refer to Section 9.6 for the Plumbing Schematic.

8.5.3 Internal Pump Additional Components

The Serinus 50 internal pump option includes the following additional components:

Table 16 – Internal Pump Parts Added

Part Description	Quantity	Part Number
Pressure Sensor Cable	1	C020062-02

Part Description	Quantity	Part Number
Heater and Thermistor Cable	1	C020083
DFU, 23 Micron	2	F010005
Internal Pump	1	H010027
Scrubber Assembly	1	H010038
#10 Orifice	1	H010043-09
Scrubber Support Ring	1	H010113
Flow Block Thermal Isolator	1	H010119
Flow Block Assembly	1	H010120
Lamp Driver PCA Bracket	1	H012115
Scrubber Assembly Bracket	1	H012172
Cable Clip Mount 13.5 X 14 mm (L X H)	3	H030121
Stop Valve	1	H030170
O-ring, 5/32 ID X 1/16 W	1	O010013

8.5.4 Internal Pump Removed Components

The Serinus 50 has a number of components missing from the standard instrument due to the presence of the internal pump and flow block controlling flow within the instrument. The parts that have been removed when internal pump is included are:

Table 17 – Internal Pump Parts Removed

Part Description	Quantity	Part Number
#12 Orifice	1	H010043-11
#20 Orifice	1	H010043-19

8.5.5 Pressure Calibration Internal Pump Option

The internal pump requires a separate modified procedure to allow the internal pump to generate the necessary vacuum (refer to Section 5.2.3).

8.5.6 Flow Calibration

The flow calibration menu is only available when the internal pump option is installed (refer to Section 3.4.12).

The internal pump requires a separate flow calibration procedure. The flow calibration detailed in Section 5.8 must be performed after any exchanges/changes to fittings, filters, pump service or pressure calibration.

8.5.7 Leak Check Internal Pump Option

The internal pump requires a separate modified procedure to leak check the system (refer to Section 6.4.4.1).

8.5.8 Pump Control

This section describes how to turn OFF and ON the internal pump for servicing and maintenance purposes.

Procedure

1. Open - **Main Menu → Service Menu → Diagnostics Menu → Internal Pump Menu**.
2. Select - **Pump Control → Manual**.
3. Toggle OFF - **Internal Pump** → Off.

8.6 Metric Fittings Kit (PN: E020122)

The metric fittings kit allows the user to connect 6 mm tubing to the rear ports of the analyser. This can be very handy if it is hard to source 1/4" tubing from a local supplier.

8.7 Internal Zero and Span (PN: E020135)

The Serinus 50 Internal Zero and Span (IZS) option is a permeation device used for checking the response of the Serinus 50 at zero and one span point. This is achieved using the following:- permeation oven, permeation tube, constant vacuum and a source of zero air (internal zero air scrubber).

Air is drawn at 3.2 slpm through an external zero air scrubber connected to the BGnd Air Port. When the internal zero mode is active, the IZS calibration valve manifold's valves change to allow the zero air to be drawn through the measurement system. When the internal span mode is active, the IZS calibration valve manifold's valves change to allow the zero air to pass by the permeation tube in the permeation oven. This generates the span gas that is then drawn through the measurement system. The permeation oven temperature is controlled by the main controller PCA, while the sample and purge flow for the permeation oven is sourced from the vacuum supplied to the Exhaust port of the instrument.

The output concentration of the permeation tube is displayed in the **Calibration Menu** as the menu item **Perm Conc**. The **Perm Conc** concentration is calculated from the user editable fields **Perm Rate**, **Perm Flow** and **Perm Tube Oven** located in the **Hardware Menu**. These menu items must be setup by the user for the concentration value to be calculated and displayed correctly.

Note: It is important that as long as the permeation tube is installed in the permeation oven a constant vacuum is supplied to the instrument.

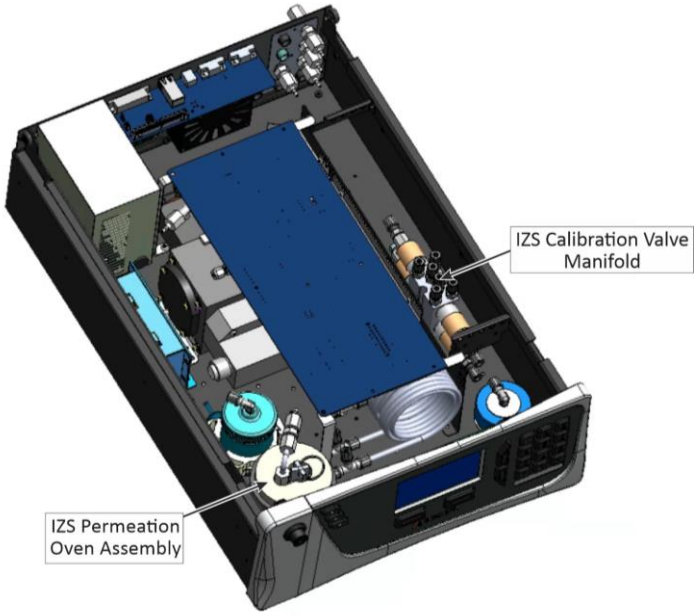

Figure 166 – IZS Specific Internal Components Diagram

8.7.1 IZS Specifications

Table 18 – IZS Parts Added

Part Description	Quantity	Part Number
IZS Heater Cable for Permeation Oven	1	C020092
1/4" PTEF Straight Ferrule	1	F030028
Nut 1/4T Steel Gripper Fitting	1	F030029
KYNAR Union Tee Fitting	1	F030034-02
1/4T Compression Fitting Nut	12	F030202-01
1/4T Suit Compression Ferrule	12	F030203-01
1/4T Union Tee Fitting	4	F030210-01
1/4" to 1/8" Adaptor Fitting	3	H010007
#5 Orifice with O-Ring Groove	1	H010043-03
IZS Calibration Valve Manifold	1	H010056
Lamp Driver PCA Bracket (Vertical)	1	H012115
IZS Permeation Oven Assembly	1	H012170
Scrubber Bracket	1	H012172
O-ring, 5/32 ID X 1/16 W	1	O010013

Table 19 – IZS Parts Removed

Part Description	Quantity	Part Number
Calibration Valve Manifold Assembly	1	H010013-01

8.7.1.1 Permeation Oven

Output Concentration

Concentration will vary depending on permeation tube selected

Dilution Flow

0.850 ml/min ± 130 ml/min

Temperature Range

50 °C ± 3 °C

Permeation Chamber Size

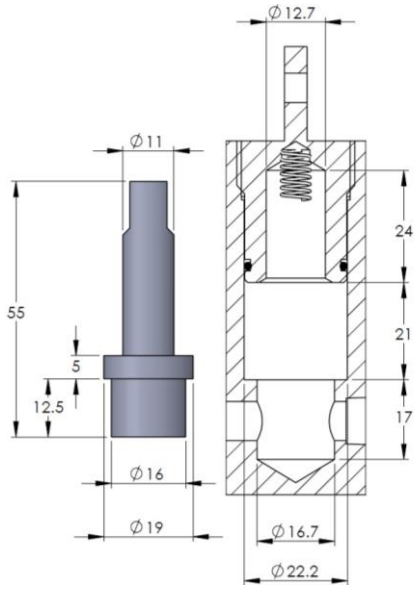

Figure 167 – Typical Permeation Tube and Chamber Dimensions (Units in mm)

8.7.1.2 Power

Power Consumption

250 VA max (typical at warm up)

180 VA after warm up

8.7.1.3 Physical Dimensions

Weight

23.4 Kg

8.7.2 IZS Setup

This section of the manual runs through the requirements to consider when selecting a permeation tube as well an initial hardware setup for the calibration device to function correctly.

8.7.2.1 Selecting a Permeation Tube

The permeation oven fits “Wafer Device” type permeation tubes with ~46 mm of active material length and ~16 mm outer diameter. Total housing length of the permeation tube is around ~55 mm x 19 mm.

Acoem Australasia recommends sourcing your permeation tube from a local supplier. Remember to confirm your desired accuracy (± 10% or ± 25%) when ordering. Permeation tubes are specified with a nominal value ± 10 - 25%. This means that if a perm tube is ordered with a permeation rate of 1080 ng/min, it can be as low as 810 ng/min or as high as 1350 ng/min. This does not mean the value will fluctuate by that much, but the actual value observed from the permeation tube can vary as much as 25% from the ordered value. Once installed and setup, perm tubes typically remain within 3% of their set value.

8.7.2.2 Hardware Setup

This procedure should be followed after a factory reset or during the installation of a new permeation tube.

Equipment Required

- Flow meter

Procedure

1. Press - (the green instrument status light), this will take you to the home screen.
2. Press - **(-99+)** on the keypad. This will open the **Advanced Menu**.
3. Open - **Advanced Menu → Hardware Menu**.
4. Enable - **IZS Internal Span → Enabled**.
5. Disconnect the permeation oven inlet and connect a flow meter (you should read around 130 ml/min purge flow while in this mode).
6. Press - (the green instrument status light), this will take you to the home screen.
7. Open - **Main Menu → Calibration Menu**.
8. Select - **Zero Source → Internal**.
9. Select - **Span Source → Internal**.
10. Select - **Cal. Mode → Span**.
11. Record the reading on the flow meter as your “perm oven flow” (should be around 830 ml/min).
12. Select - **Cal. Mode → Measure**.
13. Reconnect the permeation oven inlet.
14. Press - (the green instrument status light), this will take you to the home screen.
15. Press - **(-99+)** on the keypad. This will open the **Advanced Menu**.

16. Open - **Advanced Menu → Hardware Menu**.
17. Edit - **Perm Flow** - (Enter the flow value you recorded as “perm oven flow”) - Accept.
18. Edit - **Perm Rate** - (Refer to the certificate that accompanies your permeation tube for the permeation rate in ng/min) - Accept.
19. Ensure the **Perm Tube Oven** is set to 50 °C.
20. Press - (the green instrument status light), this will take you to the home screen.
21. Open - **Main Menu → Calibration Menu**.
22. **Perm Conc** will now display the concentration being drawn through the measurement system when a span point is running.

8.7.3 IZS Transporting/Storage

Transporting the instrument should be done with great care. It is recommended that the original packaging material the Serinus was delivered in should be used when transporting or storing.

When transporting or storing the instrument the following points should be followed:

Procedure

1. Slide back or remove the lid to access the inside of the instrument.
2. Refer to Figure 168. Unscrew the white Teflon plug on top of the permeation oven and then pull the split ring to fully remove the plug.

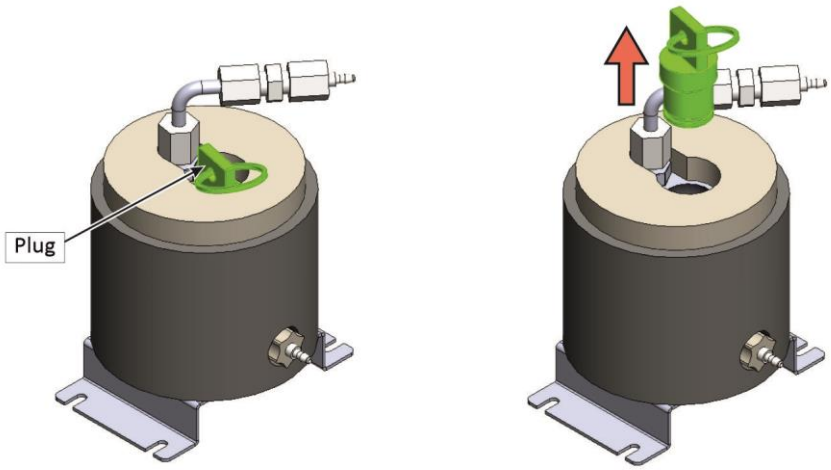

Figure 168 – Permeation Tube Removal

3. Remove the permeation tube from the permeation oven and store in its original shipping tube. If the device will not be used for at least a week and its total useful life in less than a year, the device should be placed in cold storage to prolong its useful lifespan.
4. Replace the Teflon plug back in to the permeation oven.
5. Allow the instrument some time to purge the pneumatic system.
6. Turn OFF the instrument and allow it to cool down.
7. Remove all pneumatic, power and communication connections.

8. Remove the instrument from the rack.
9. If storing over a long period (six months) turn the battery OFF by switching the DIP switch (S1) on the main controller PCA (refer to Figure 36).
10. Replace the red plugs into the pneumatic connections.
11. Remove the USB memory stick and pack with instrument (refer to Figure 36).
12. If you have the IZS option installed refer to Section 8.7.3 for specific transporting and storage instructions.
13. Place the instrument back into a plastic bag with desiccant packs and seal the bag (ideally the bag supplied upon delivery).
14. Place the instrument back into the original foam and box it was delivered in. If this is no longer available find some equivalent packaging that provides protection from damage.
15. The instrument is now ready for long term storage or transportation.

8.7.4 IZS Calibration

8.7.4.1 IZS Pressure Calibration

To perform a pressure calibration refer to Section 5.2.

8.7.4.2 IZS Zero

Equipment Required

- None

Procedure

1. Open - **Main Menu → Calibration Menu**.
2. Select - **Cal. Type → Manual** - Accept.
3. Select - **Zero Source → Internal** - Accept.
4. Select - **Cal. Mode → Zero** - Accept.
5. Allow the instrument time to achieve a stable response.
6. Enter - **Zero Calibrate SO2** - OK.
7. Select - **Cal. Mode → Measure** - Accept (To return to sample measure).

8.7.4.3 IZS Span

Equipment Required

- None

Procedure

1. Open - **Main Menu → Calibration Menu**.
2. Select - **Cal. Type → Manual** - Accept.

3. Select - **Span Source → Internal** - Accept.
4. Select - **Cal. Mode → Span** - Accept.
5. Let the instrument stabilise, typically 15 minutes.
6. Enter - **Span Calibrate SO2** - (Enter the span output concentration) - Accept.
7. Select - **Cal. Mode → Measure** - Accept (To return to sample measure).

8.7.5 IZS Service and Maintenance

This maintenance kit is required when performing annual maintenance on the instrument. Depending on the environment that the instrument is operating, the maintenance may need to be carried out more often than yearly.

Table 20 – IZS Annual Maintenance Kit - (PN: E020212)

Part Description	Quantity	Part Number
Viton O-ring (3/4" ID X 1/16" W)	1	25000447-018
5g Desiccant Pack	2	C050014
Stainless Steel Sintered Filter	1	F010004
DFU, 23 Micron	2	F010005
M3 x 6 Nylon Washer Shoulder	2	F050040
Neoprene Washer (0.174" x 0.38" x 0.016")	2	F050041
Compression Spring	1	H010040
Stainless Steel Sintered Filter With O-ring Groove Body	2	H010047-01
Stainless Steel Sintered Filter With Screw In Body	3	H010053
Check Valve, 1/8" Barb	1	H030140
O-ring (0.364" ID X 0.070" W)	7	O010010
O-ring (0.426" ID X 0.070" W)	1	O010011
O-ring (5/32" ID X 1/16" W)	6	O010013
O-ring (1 11/16" ID X 3/32" W)	2	O010014
O-ring (1/4" ID X 1/16" W)	7	O010015
O-ring (13/16" ID X 1/16" W)	8	O010016
O-ring (1 5/8" ID X 1/16" W)	1	O010017
O-ring (5 3/4" ID X 3/32" W)	1	O010018
O-ring (0.208" ID X 0.07" W)	1	O010021
O-ring (1.739" ID X 0.07" W)	1	O010022
O-ring (BS015)	7	O010023
O-ring (0.114" ID X 0.07" W)	1	O010032
O-ring (1.989 ID x 0.07 W)	2	O010054
Ecotech Tubing	3	T010026

8.7.5.1 IZS Leak Check

The following leak check procedure describes how to leak check the Serinus 50 with the IZS option. Following the procedure in conjunction with the plumbing schematic and assembly drawing will enable the user to track and repair system leaks.

Note: As the plumbing is complex and the plumbing diagram is not a physical representation of the actual plumbing in the instrument, we refer to the valves in the procedure by name and valve number. We also refer to port connections as NO, NC and C. This describes the state of the valve when it is de-energised, Normally Open (NO) Normally Closed (NC) and Common (C).

Equipment Required

- Source of Vacuum (pump)
- Leak Test Jig (PN: H050069)
- Kynar 1/4" Blocker Nuts
- Tubing and Assorted Fittings
- 5/8" Spanner
- 9/16" Spanner
- 7/16" Spanner

Procedure

Note: Ensure that the instrument has been running for at least one hour before this procedure is performed.

1. Turn OFF the vacuum source and allow the instrument to return to ambient pressure.
2. Disconnect all external tubing connected to the rear ports of the instrument.
3. Connect a leak check jig to the Exhaust Port of the instrument.
4. Connect a vacuum source to the shut off valve end of the leak test jig ensuring the shut off valve is in the open position.
5. Open - **Main Menu → Service Menu → Diagnostics Menu → Valve Menu**.
6. Disable - **Valve Sequencing → Disabled**.
7. Turn **Off** all the valves except the **Internal Span A** and **Internal Span B** valves.
8. Block the **BGnd Air Port**.
9. Allow the instrument time to evacuate the pneumatic system (the time required will depend on the vacuum source used).
10. Close the shut off valve and record the vacuum. Wait for three minutes and observe the gauge on the leak check jig. It should not drop more than 5 kpa (37.5 torr). If the leak check passed skip to step 12.

Note: The first test, leak checks the IZS path and the bulk of the pneumatic system.

11. Inspect the instrument's plumbing looking for obvious damage. Check the condition of fittings, particulate filter housing plus the O-rings both in the filter assembly and in the reaction cell

assembly. Locate and repair the leak by dividing up the pneumatic system into discrete sections (refer to Section 9.7) then rerun the leak check procedure from step 5.

12. Remove the Blocker on the **BGnd Air Port** allowing the gauge to return to ambient.
13. Open - **Main Menu → Service Menu → Diagnostics Menu → Valve Menu**.
14. Turn **Off** all the valves.
15. Block the **BGnd Air Port** and the **Sample Port**.
16. Open the shut off valve and allow the instrument time to evacuate the pneumatic system (the time required will depend on the vacuum source used).
17. Close the shut off valve and record the vacuum. Wait for three minutes and observe the gauge on the leak check jig. It should not drop more than 5 kpa (37.5 torr). If the leak check passed skip to step 19.

Note: The second leak check tests the sample path and the bulk of the pneumatic system.

18. Your leak is located somewhere in the sample path. The path consists of the blocked **Sample Port** through the IZS Calibration valve manifold **Sample Cal** valve (V3 - NO) to the inlet of **Internal Span A** valve (V1 - NO). Following this path described locate and repair the leak (refer to Section 9.7 and 9.16) then rerun the leak check procedure from step 13.
19. Remove the Blocker on the **Sample Port** allowing the gauge to return to ambient.
20. Open - **Main Menu → Service Menu → Diagnostics Menu → Valve Menu**.
21. Turn **Off** all the valves except for the **Sample/Cal** valve.
22. Block the **BGnd Air Port** and the **Calibration Port**.
23. Open the shut off valve and allow the instrument time to evacuate the pneumatic system (the time required will depend on the vacuum source used).
24. Close the shut off valve and record the vacuum. Wait for three minutes and observe the gauge on the leak check jig. It should not drop more than 5 kpa (37.5 torr). If the leak check passed skip to step 26.

Note: The third leak check tests the calibration path and the bulk of the pneumatic system.

25. Your leak is located somewhere in the calibration path. The path consists of the blocked **Calibration Port** through the IZS Calibration valve manifold **Sample Cal** valve (V3 - NC) port to the inlet of **Internal Span A** valve (V1 - NO) port. Following this path described locate and repair the leak (refer to Section 9.7 and 9.16) then rerun the leak check procedure from step 20.
26. Remove the blocker on the **Calibration Port** allowing the gauge to return to ambient.
27. Remove the blocker from the **BGnd Air Port**.
28. Inspect the internal pneumatics to ensure the tubing has a clean solid connection to the fittings.
29. Remove the leak check jig.
30. Enable - **Valve Sequencing → Enabled**.

8.8 High Pressure Zero/Span Valves

High pressure span calibration valve (factory installed) PN: E020108

High pressure zero calibration valve (factory installed) PN: E020109

Note: Before using a high pressure span or zero as a source calibrating the instrument, check with your local regulatory requirements.

Table 21 – High Pressure Zero/Span Valves Parts Added

Part Description	Quantity	Part Number
High Pressure Zero/Span Valve Assembly	1	H050043
O-Ring 5/32 ID X 1/16 W, BS007	1	O010013
#14 Orifice	1	H010043-13

Refer to Section 5.9 for operation of this installed option.

Refer to Section 9.19 for the exploded assembly drawing.

8.9 Trace Level Instrument (PN: E020126)

The trace option enables the instrument to detect sulfur dioxide from 0 - 2000 ppb with a lower detectable limit of 100 ppt.

8.9.1 Trace Specifications

The following tables list the changes to a standard instrument with the trace option installed:

Table 22 – Trace Parts Added

Parts Added	Quantity	Part Number
Trace Reaction Cell Assembly	1	H012100-02

Table 23 – Trace Parts Removed

Parts Removed	Quantity	Part Numbers
Reaction Cell Assembly	1	H012100

8.9.1.1 Measurement

Range

0 - 2000 ppb autoranging

Lower detectable limit: 100 ppt, with Kalman filter active

8.9.1.2 Precision/Accuracy

Response Time

< 60 seconds to 90%

8.9.1.3 Calibration

Zero Drift

24 hours: < 200 ppt

Span Drift

24 hours: < 0.5% of reading or 1 ppb whichever is greater

8.9.2 Trace Setup

Sighting and System Setup

The sensitivity of the Serinus 50 trace requires special materials to be used for all measurement path lines. These materials must be inert to the pollutant being measured as shown below:

- Sample Column: The sample column should be made of glass to prevent reactions with air drawn into column.
- Sample Hood: The sample hood should be made of Teflon, ensuring that there is no sample retention.
- Lines: All sample transport tubing, including zero and calibration lines, must be made of virgin Teflon, PTFE or FEP.
- Regulator: A high purity, stainless steel dual stage regulator should be used.
- Stainless steel chromatography grade 1/8” gas lines should be used to connect span gas cylinder to gas dilution device.
- Calibration should be carried out by flooding the sample manifold with 10 - 20 l/m of calibration gas. This method ensures that all sample gas contact areas are exposed to the calibration gas.
- Zero calibrations should also involve flooding with zero gas at 10 - 20 l/m.
- Sample gas residence time in the manifold should be less than 3.5 seconds.

Instrument

- Connect 1/4” virgin PTFE FEP tubing to each end of the Charcoal scrubber. Connect one end to the BGnd Air Port, and then connect the other end to the sample manifold.

8.9.3 Trace Operation

Pneumatics

A standard Serinus 50 instrument uses calibration valves to supply sample, span and zero air to the inlet. The small error created from delivering gas through different lines is not measurable in standard instruments but can offset results in a trace level instrument. To eliminate this difference the zero and span gas is flooded directly into the sample manifold (the manifold pump or fan is disabled and isolated

with a valve) to a point where it fills the entire manifold and overflows preventing any ambient external air from entering. Thus the manifold inlet now becomes the calibration vent. The air within the manifold is then drawn through the instrument where measurements can be taken and compared to the concentration being delivered by the calibration system.

8.9.4 Trace Default Values

The Serinus 50 trace default parameters vary from the Serinus 50 standard setup. The following is a list of the parameters and their new default values as well as expected values.

Table 24 – Trace Parameter Value Changes

Parameter	Default Value
Input Pot	206
Bkgnd Fill	8 min

8.9.5 Trace Calibration Guidelines

To perform a multipoint calibration follow the procedure outlined in Section 5.7 for the general setup. As some aspects of calibration need more attention the following steps outline some of the changes in the calibration procedure that must be understood before performing any calibration:

Note: Before commencing a multipoint calibration, perform a manual background with zero air flowing at 10 - 20 Lpm into the column.

- Span/Zero gas should be injected directly into the sample manifold with a volume that will flood the manifold preventing any external air from entering and influencing the Span/Zero gas.
- Losses may occur in the sample manifold and tubing due to contaminants entering during normal measurement cycle. Flooding the sample manifold and tubing with zero air can help clean these contaminants out.
- The instrument must be powered up and in normal measurement calibration mode (ie all gas lines are attached and ready for use) for up to 48 hours before a calibration can be performed.

Note: A 48 hour preconditioning is necessary to warm-up materials and ensures that the instrument is working at its optimum when the calibration is performed. This preconditioning is particularly important for trace instrument calibrations due to the sensitive nature of the measurements.

- The Serinus 50 trace must be used in a laboratory environment which includes air conditioning to stabilise the temperature.
- A zero test should be performed over a 24 hour period to get an accurate reading of the Lowest Detectable Limit (LDL) of the entire system installation. Throughout this time period ten minute intervals should be used to collect readings of the SO_2 from the zero air. From the data acquired the smallest detectable signal that can be accurately measured is found as well as the noise which determines the stability and precision of readings.
- A 6 Point multipoint precision check must be performed. Five points (100, 80, 60, 40 and 20%) throughout the sampling range and one point at zero.

Note: An extra point of reference in the multipoint precision check is necessary in trace instruments due to the sensitive nature of the measurements.

- A shut off valve should be designed into the sample manifold system, whereby the fan or pump used to draw in the sample air is turned OFF and the valve isolates the fan or pump from the sample manifold, when a calibration is in process (as ambient air is not required for calibration and will make calibration void). This valve can be controlled manually or via the data logger providing the data logger is designed with this function.

8.9.6 Trace Service and Maintenance

The maintenance intervals are determined by compliance standards that differ in various regions. The following is recommended by Acoem Australasia as a guide. Compliance with local regulatory or international standards is the responsibility of the user. The below list only includes items that are different to a standard range instrument:

Table 25 – Maintenance Schedule

Interval *	Task Performed	Section
	Replace particulate filter	6.4.1
	Check sample inlet system for moisture or foreign materials and clean.	
6 Monthly	Perform multipoint precision check	8.9.5

* Suggested intervals for maintenance procedure are a guide only and may vary with sampling intensity and/or environmental conditions. Refer to your local regulatory standard for your personalised maintenance schedule.

9. Parts List and Schematics

9.1 Serinus Accessories Kit

This kit contains assorted fittings, tubing and an orifice removal tool which are useful when working on the instruments internal pneumatics. This is usually purchased with the instrument.

Table 26 – Serinus Accessories Kit (PN: H010136)

Part Description	Part Numbers	Quantity
Fitting Nut 1/4T KYNAR Plug	036-130440-2	4
Fitting, Kynar, Union Tee 1/8” Barb - 400 Series	F030007-01	4
Fitting, Kynar, Union 1/8” Barb	F030008	2
Kynar 1/4T Fitting Nut	F030024	4
Adaptor, 1/4" Fitting To 1/8" Barb	H010007	4
Adaptor,1/4" Tube To 1/8" Barb	H010008	2
Tool, Extraction Orifice and Filter	H010046	1
Cap, Black Rubber, 1/8”	H030003	4
Cap, Black Rubber, 1/4”	H030004	4
Tubing, 1/4" OD, 1/8" ID Black	T010021	3 ft
Ecotech Tubing	T010026	3 ft

9.2 Maintenance Kit

This maintenance kit is required when performing annual maintenance on the instrument. Depending on the environment that the instrument is operating, this maintenance may need to be carried out more often than yearly.

Table 27 – Serinus 50 Maintenance Kit - (PN: E020204)

Part Description	Part Number	Quantity
5 g Desiccant Pack	C050014	2
DFU, 23 Micron	F010005	1
Kynar Male Tee Fitting	F030033-01	1
M3 x 6 Nylon Washer Shoulder	F050040	2
Neoprene Washer (0.174" x 0.38" x 0.016")	F050041	2
O-Ring (BS115)	O010004	2
O-Ring (0.364 ID X 0.070 W)	O010010	2
O-Ring (5/32 ID X 1/16 W (BS007))	O010013	5

Part Description	Part Number	Quantity
Viton O-Ring (1 11/16 ID X 3/32 W)	O010014	2
Viton O-Ring (1/4 ID X 1/16 W)	O010015	2
Viton O-Ring (13/16 ID X 1/16 W)	O010016	2
Viton O-Ring (1 5/8 X 1/16)	O010017	1
Viton O-Ring (5 ¾ ID X 3/32 W)	O010018	1
Viton O-Ring (0.208 ID X 0.07 W)	O010021	1
Viton O-Ring (1.739 ID X 0.07 W)	O010022	1
Viton O-Ring (BS015)	O010023	4
Viton O-Ring (7/8 ID X 1/16 W)	O010026	1
Viton O-Ring (0.987 ID X 0.103 W)	O010027	1
Viton O-Ring (1.364 ID X 0.070 W)	O010028	1
Viton O-Ring (0.799 ID X 0.103 W)	O010029	1
Viton O-Ring (1.862 ID X 0.103 W)	O010030	4
Viton O-Ring (5/16 ID X 1/2 OD X 3/32 W),	O010031	1
Viton O-RING, BS032, VITON	O010042	1
Viton O-RING, 1.989 ID x 0.07 W,	O010054	2
Viton O-Ring (BS038)	ORI-1019	1
Ecotech Tubing	T010026	3 ft

9.3 Consumables

Parts shown as consumables below will require replacement over the course of the instrument's lifespan.

Table 28 – Serinus 50 Consumables

Consumable	Part Number
Filter Paper Teflon 47 mm pack of 50	F010006-01
1 kg Bottle of Activated Charcoal	ECO-1035
Orifice - Sample #12	H010043-11
Orifice - Sample #20	H010043-19
UV Lamp Assembly	C020076
External Pump Repair Kit (suite 607 pump)	P031001
Internal Pump Repair Kit (to suit KNF Pump)	P031005
Zero Air Scrubber	H010038
Ecotech Tubing, 25 ft Length	T010026-01

Consumable	Part Number
Annual Maintenance Kit	E020204

***Warranty Disclaimer:** The product is subject to a warranty on parts and labour from date of shipment (the warranty period). The warranty period commences when the product is shipped from the factory. **Lamps, fuses, batteries and consumable items are not covered by this warranty**.

Subject to use refers to variable ambient conditions, toxic gases, dirt, extremes of temperature and moisture ingress may shorten the lifespan of components.

9.4 Instrument Parts List

List of Serinus 50 components and part numbers for reference.

Note: Before refer to the spare part number confirm the part number and its location in attached drawings.

Table 29 – Spare Parts List (Main Components)

Part Description	Part Number
Lamp Driver PCA	C010006-01
Main Controller PCA	E020230-01
Fan (Chassis and PMT Assembly)	C020058
DFU, 23 Micron	F010005
Calibration Valve Manifold Assembly	H010013-01
Zero Air Scrubber	H010038
Rear Panel PCA	C010002-10
Rear Panel PCA (Network Port)	C010002
Chassis Fan Filter Kit	H010044
Front Panel Assembly	H010130
LCD Display	D010001-50
Sample Filter Holder	H010160
Power Supply	P010013
Reaction Cell Assembly	H012100
Pressure Sensor PCA (Reaction Cell)	C010004
UV Reference Detector & Preamplifier PCA	C010008
Heater Thermistor Assembly (Reaction Cell)	C020074
UV Lamp Assembly	C020076
Gasket for Pressure Sensor PCA	H010037
#12 Orifice (Reaction Cell)	H010043-11

Part Description	Part Number
#20 Orifice (Reaction Cell)	H010043-19
Retainer (Plano-Convex Lens)	H012103
Retainer (Bi-Convex Lens)	H012104
Optical Bandpass Filter (U340)	H012114
UV Bandpass Filter	H012116
Lens (Plano-Convex)	H012117
Lens (Bi-Convex)	H012118
PMT Assembly	H012130
Cooler and Thermistor Assembly (PMT Assembly)	C020088
PMT Magnetic Shield	H011204
Heatsink	H011209
Cold Block	H011210
PMT Assembly Housing	H011212
Photomultiplier Tube (PMT Assembly)	H012132
Dual Hydrocarbon Kicker Assembly	H012140

Table 30 – Spare Parts List (Cables)

Part Description	Part Number
Pressure Sensor Cable	C020062-01
Display Cable	C020065
Analog & Digital I/O Cable	C020066
Lamp Drive Cable	C020067
Heater and Thermistor Cable	C020081
UV Reference Detector & Preamplifier Cable	C020090
Bluetooth Cable	C020119
PMT Power Supply Cable	C020050-02

Table 31 – Spare Parts List (O-rings)

Part Description	Part Number
O-ring 1/4 ID X 1/16 W (Calibration Valve Manifold)	O010015
O-ring 1.862 ID X 0.103 W (Zero Air Scrubber)	O010030
O-ring 1.989 ID X 0.07 W (Sample Filter)	O010054
O-ring 11/16 ID X 3/32 W (UV Lamp Holder)	O010004
O-ring 5/32 ID X 1/16 W (Reaction Cell Orifice)	O010013

Part Description	Part Number
O-ring 1-5/8 ID X 1/16 W (Optical Bandpass Filter Cover)	O010017
O-ring 0.208 ID X 0.07 W (Test Lamp Plug)	O010021
O-ring 7/8 ID X 1/16 W (UV Bandpass Filter)	O010026
O-ring 0.987 ID X 0.103 W (Lens, Plano-Convex)	O010027
O-ring 1.364 ID X 0.070 W (Reaction Cell)	O010028
O-ring 0.799 ID X 0.103 W (Lens, Bi-Convex)	O010029
O-ring 5/16 ID X 1/2 OD X 3/32 W (UV Reference Detector)	O010031
O-ring, BS032 (Optical Bandpass Filter Cover)	O010042
O-ring, BS038 (Reaction Cell)	ORI-1019
O-ring 1 1/4 ID X 1/16 W (Optical Bench Housing Plug)	25000419-4
O-ring 1.739 ID X 0.07 W (PMT Cable Desiccant Cap)	O010022
O-ring 5-3/4 ID X 3/32 W (PMT Assembly Housing)	O010018

Table 32 – Spare Parts List (Fittings)

Part Description	Part Number
Kynar Union Fitting	F030022
1/4" PTEF Straight Ferrule	F030028
Nut 1/4T Steel Gripper Fitting	F030029
Kynar Union Elbow Fitting	F030030
1/4"-1/8" PTFE Ferrule Reducing	F030031
1/4T Compression Fitting Nut	F030202-01
1/4T Suit Compression Ferrule	F030203-01
1/4T Union Tee Fitting	F030210-01
1/4" to 1/8" Adaptor Fitting	H010007
Male Connector Fitting	F030200-01
Kynar Male Elbow Fitting	F030032-02
Male Elbow Fitting	F030201-01
Kynar Bulkhead Union Fitting	F030023
Male Elbow Fitting	F030025
Kynar Male Branch Tee Fitting	F030033-01
M3 X 10 Spacer	F050061
Shoulder Washer M3 X 6	F050040
Washer 0.178 X 0.38 X 0.016	F050041
Kynar Fitting Nut 1/4T (Double Plastic Ferrule)	F030024

Part Description	Part Number
Kynar Union Tee Fitting	F030034-01
Adaptor Tee Fitting	F030211-01

Table 33 – Spare Parts List (Miscellaneous)

Part Description	Part Number
Fan Bracket (PMT Assembly)	H010005
PCB Support Bracket	H010011-01
Filter Felt	F010010
Scrubber Body	H010049
Scrubber Cap	H010050
Scrubber Support Screen	H010051
Scrubber Spacer	H010052
9/16” High Foot Bumper	H010039
Black Blanking Plug	H010041
Front Panel Clearance Spacer	H010064
Network Port Blanking Plug	H010067
Main Controller PCA Support Bracket (Rear Panel Side)	H010111
Sample Filter Mounting Plate	H010126
Roller Bearing	H010131
Power Supply Bracket	H010138
Rear Panel	H010142
Push Button Slam Lock	H030114
Nylon P Clip, 1/2" (12.7 mm)	H030149
Scrubber Support Ring	H010113
Main Controller PCA Support Bracket (Front Panel Side)	H010117
Plug	H010026
Reaction Cell Block	H012101-01
Retainer (Optical Bandpass Filter)	H012102
Reaction Cell Bracket	H012105
Reaction Cell Housing Plug	H012106
Adaptor (Reaction Cell to PMT Assembly)	H012107
Baffle (Reaction Cell)	H012109
Dump (Reaction Cell)	H012111
Retainer (UV Reference Detector)	H012112

Part Description	Part Number
UV Lamp Block	H012121
Baffle (UV Bandpass Filter)	H012122
Retainer (UV Bandpass Filter)	H012123
UV Lamp Collet (Stright Through)	H012124
UV Lamp Collet (Blind)	H012125
Cover (Lamp Driver PCB)	H012108
Tie Bar (Reaction Cell to PMT Assembly)	H012113
Heatsink Bracket	H010006
Heatsink Spacer	H011208
Optical Bench Housing Plug	H011213
Ecotech Tubing	T010026
1/4" Teflon Tubing	TUB-1007
8 GB USB Memory Stick	H030021
Cable Clip Mount 13.5 X 14 mm (L X H)	H030121
Cable Clip Mount 13.5 X 14 mm (L X H)	H030122
USB Cable	COM-1440
Thumb Screw (Rear Panel)	F050037
Thumb Screw (Main Controller PCA)	F050120
Green Ecotech Resources USB Stick	H030137-01
Cable Tie Mount	060-060130

Table 34 – Spare Parts List (Shipping)

Part Description	Part Number
Desiccant Pack (5 gm)	C050014
Shipping Box	B010002
End Caps (Pair)	B010026
Plastic Bag 760 X 1000 50 X UM	B020001
Mid Support Cap	B010034
Desiccant Pack (25 gm)	C050012

9.4.1 Optional Extras Spare Part List

Table 35 – Spare Part List (Test Lamp)

Part Description	Part Number
Test Lamp	C020068-01
Quartz Window	H010002

Table 36 – Spare Part List (Internal Pump)

Part Description	Part Number
Pressure Sensor Cable	C020062-02
Heater and Thermistor Cable	C020083
DFU, 23 Micron	F010005
Internal Pump	H010027
Scrubber Assembly	H010038
#10 Orifice	H010043-09
Scrubber Support Ring	H010113
Flow Block Thermal Isolator	H010119
Flow Block Assembly	H010120
Lamp Driver PCA Bracket	H012115
Scrubber Assembly Bracket	H012172
Cable Clip Mount 13.5 X 14 mm (L X H)	H030121
Stop Valve	H030170
O-ring, 5/32 ID X 1/16 W	O010013

Table 37 – Spare Part List (Metric Fittings Kit)

Part Description	Part Number
Metric Fitting Kit	E020122
Nut 1/4T Steel Gripper Fitting	F030029
Reducing Ferrule, 1/4 - 6 mm	F030071
Swagelok Fitting, Nut & Ferrule Set, 6 mm (Only for High Pressure Zero/Span Option)	F030077

Table 38 – Spare Part List (IZS)

Part Description	Part Number
IZS Heater Cable for Permeation Oven	C020092
1/4" PTEF Straight Ferrule	F030028
Nut 1/4T Steel Gripper Fitting	F030029
KYNAR Union Tee Fitting	F030034-02
1/4T Compression Fitting Nut	F030202-01
1/4T Suit Compression Ferrule	F030203-01
1/4T Union Tee Fitting	F030210-01
1/4" to 1/8" Adaptor Fitting	H010007
#5 Orifice with O-Ring Groove	H010043-03
IZS Calibration Valve Manifold	H010056
Lamp Driver PCA Bracket (Vertical)	H012115
IZS Permeation Oven Assembly	H012170
Scrubber Bracket	H012172
O-ring, 5/32 ID X 1/16 W	O010013

Table 39 – Spare Part List (High Pressure Zero/Span Valves)

Part Description	Part Number
Bulkhead Fitting 1/4 T, SS	98300076
O-ring, BS015	O010023
Swagelok fitting pipe adaptor 1/4” T - 1/8” NPT, SS	28590462-3
#12 Orifice	H010043-11
O-ring, 5/32 ID X 1/16 W	O010013
M12 Star Washer	F050131
M12 Flat Washer	F050130
High Pressure Valve Assembly (Exclude the Orifice and O-Ring)	H050043

Table 40 – Spare Part List (Trace Level Instrument)

Part Description	Part Number
Trace Reaction Cell Assembly	H012100-02

9.5 Plumbing Schematic - (PN: D020003)

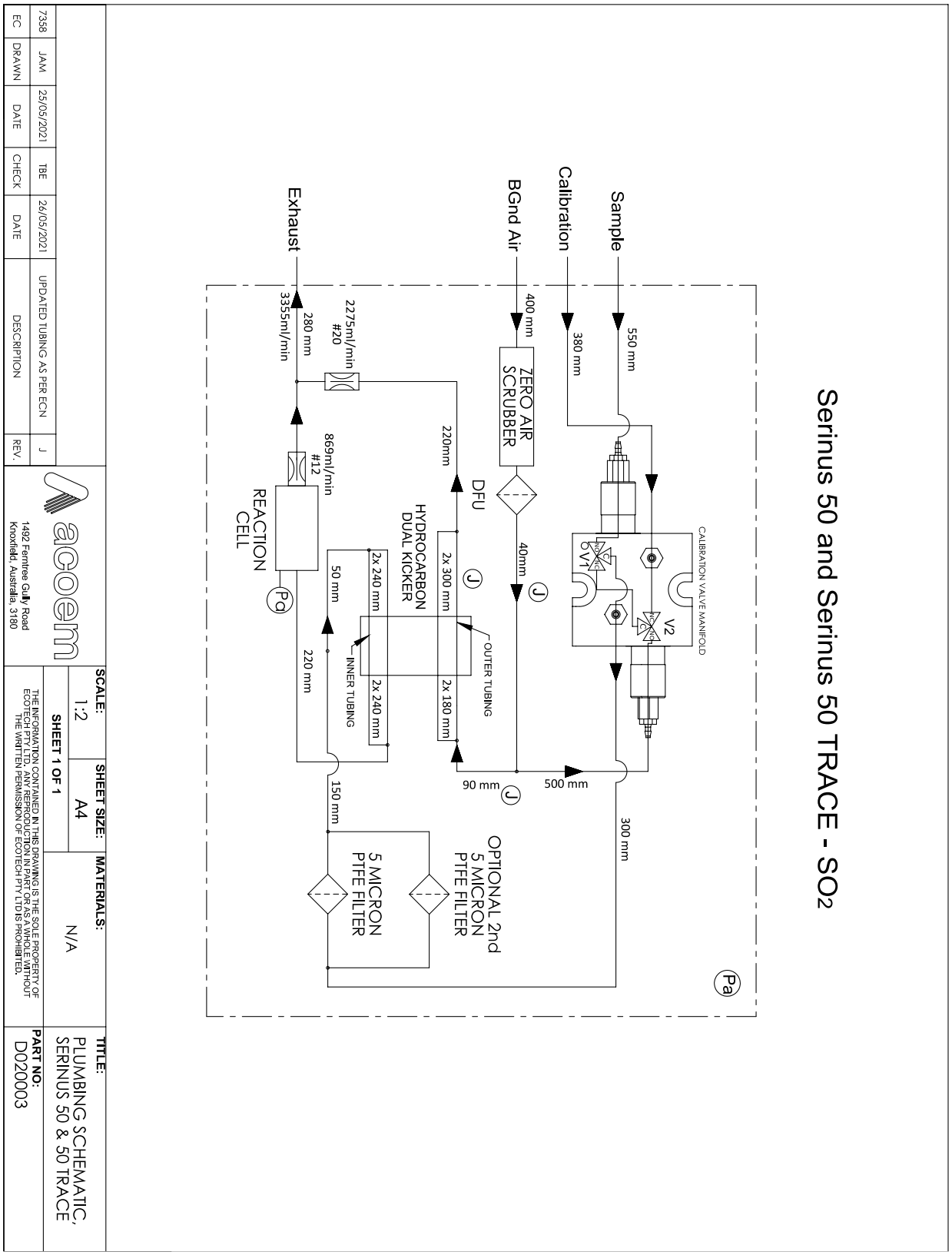

REV.	DESCRIPTION	DATE	CHECK	DATE	DRAWN	DATE	EC
J	UPDATED TUBING AS PER ECN	26/05/2021	TBE	25/05/2021	JAM		7358

acoem
1492 Ferntree Gully Road
Knoxfield, Australia, 3160

SCALE: 1:2 | SHEET SIZE: A4 | SHEET 1 OF 1 | MATERIALS: N/A

THE INFORMATION CONTAINED IN THIS DRAWING IS THE SOLE PROPERTY OF ECOTECH PTY LTD. ANY REPRODUCTION IN PART OR AS A WHOLE WITHOUT THE WRITTEN PERMISSION OF ECOTECH PTY LTD IS PROHIBITED.

TITLE: PLUMBING SCHEMATIC, SERINUS 50 & 50 TRACE

PART NO: D020003

9.6 Internal Pump Plumbing Schematic - (PN: D020006)

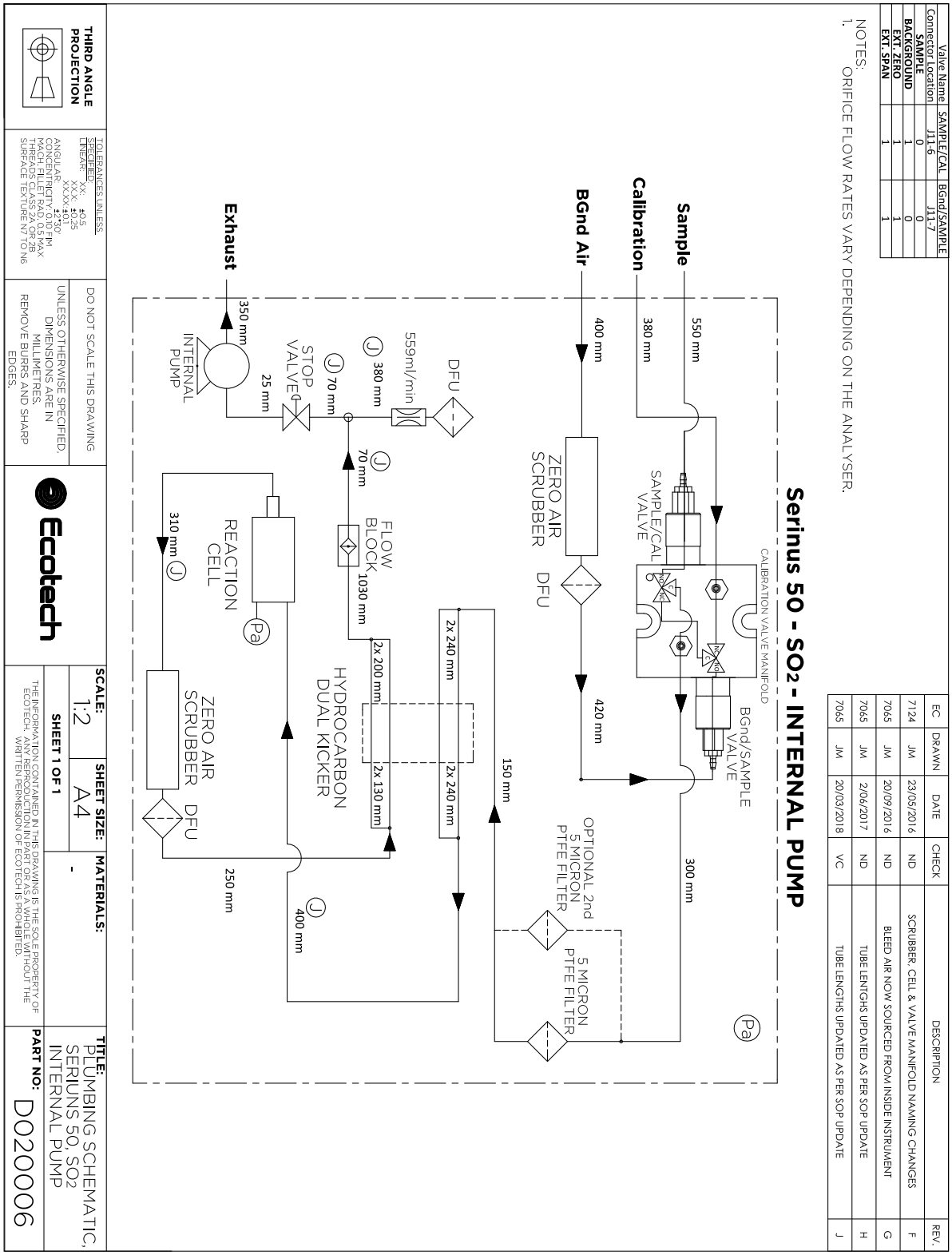

Valve Name	SAMPLE/CAL	BGnd/SAMPLE
Connector Location	J11-6	J11-7
SAMPLE	1	0
BACKGROUND	1	0
EXT. ZERO	1	1
EXT. SPAN	1	1

NOTES:
1. ORIFICE FLOW RATES VARY DEPENDING ON THE ANALYSER.

EC	DRAWN	DATE	CHECK	DESCRIPTION	REV.
7124	JM	23/05/2016	ND	SCRUBBER, CELL & VALVE MANIFOLD NAMING CHANGES	F
7065	JM	20/09/2016	ND	BLEED AIR NOW SOURCED FROM INSIDE INSTRUMENT	G
7065	JM	2/04/2017	ND	TUBE LENTGHS UPDATED AS PER SOP UPDATE	H
7065	JM	20/03/2018	VC	TUBE LENGTHS UPDATED AS PER SOP UPDATE	J

THIRD ANGLE PROJECTION

TOLERANCES UNLESS SPECIFIED
LINEAR: XX. ±0.5, XX.X ±0.25, XX.XX ±0.1
ANGULAR: ±2°30'
CONCENTRICITY Ø0.05 FIM
MACH. FILLET RAD. 0.5 MAX
THREADS CLASS 2A OR 2B
SURFACE TEXTURE N7 TO N6

DO NOT SCALE THIS DRAWING
UNLESS OTHERWISE SPECIFIED, DIMENSIONS ARE IN MILLIMETRES.
REMOVE BURRS AND SHARP EDGES.

Ecotech

SCALE: 1:2
SHEET SIZE: A4
SHEET 1 OF 1
MATERIALS: -

THE INFORMATION CONTAINED IN THIS DRAWING IS THE SOLE PROPERTY OF ECOTECH. ANY REPRODUCTION IN PART OR AS A WHOLE WITHOUT THE WRITTEN PERMISSION OF ECOTECH IS PROHIBITED.

TITLE: PLUMBING SCHEMATIC, SERIUNS 50, SO2 INTERNAL PUMP
PART NO: D020006

9.7 IZS Plumbing Schematic - (PN: D020053)

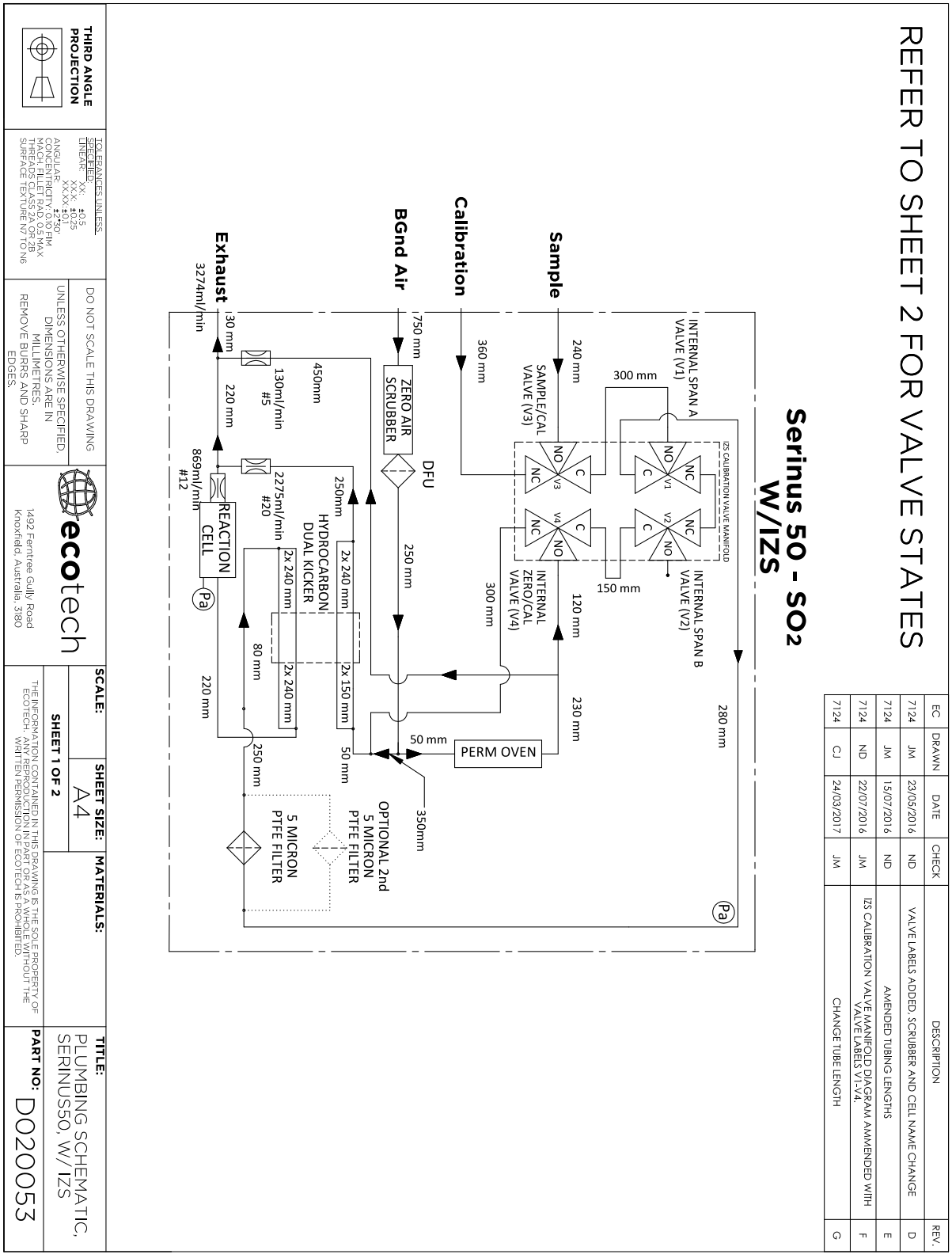

EC	DRAWN	DATE	CHECK	DESCRIPTION	REV.
7124	JM	23/05/2016	ND	VALVE LABELS ADDED, SCRUBBER AND CELL NAME CHANGE	D
7124	JM	15/07/2016	ND	AMENDED TUBING LENGTHS	E
7124	ND	22/07/2016	JM	IZS CALIBRATION VALVE MANIFOLD DIAGRAM AMMENDED WITH VALVE LABELS V1-V4.	F
7124	CJ	24/03/2017	JM	CHANGE TUBE LENGTH	G

THIRD ANGLE PROJECTION

TOLERANCES UNLESS SPECIFIED:
LINEAR: XX ±0.5, XXX ±0.25, XXXX ±0.13
ANGULAR: ±2°30'
CONCENTRICITY: Ø10 FIM
MAXIMUM MATERIAL CONDITION
THREADS: CLASS 2A OR 2B
SURFACE TEXTURE N7 TO N6

DO NOT SCALE THIS DRAWING

UNLESS OTHERWISE SPECIFIED, DIMENSIONS ARE IN MILLIMETRES.
REMOVE BURRS AND SHARP EDGES.

ecotech

1492 Ferntree Gully Road
Knoxfield, Australia, 3180

SCALE:

SHEET SIZE: A4

SHEET 1 OF 2

MATERIALS:

THE INFORMATION CONTAINED IN THIS DRAWING IS THE SOLE PROPERTY OF ECOTECH. ANY REPRODUCTION IN PART OR AS A WHOLE WITHOUT THE WRITTEN PERMISSION OF ECOTECH IS PROHIBITED.

TITLE: PLUMBING SCHEMATIC, SERINUS50, W/ IZS

PART NO: D020053

		VALVE STATES			
		IZS CALIBRATION MANIFOLD			
		(V1) - (J11-8) (INTERNAL SPAN A)	(V2) - (J11-9) (INTERNAL SPAN B)	(V3) - (J11-6) (SAMPLE/CAL)	(V4) - (J11-7) (INTERNAL ZERO/CAL)
MODE	SAMPLE MEASURE	OFF	OFF	OFF	OFF
	INTERNAL ZERO MEASURE	ON	ON	OFF	ON
	EXTERNAL ZERO MEASURE	OFF	OFF	ON	OFF
	INTERNAL SPAN MEASURE	ON	ON	OFF	OFF
	EXTERNAL SPAN MEASURE	OFF	OFF	ON	OFF
	BACKGROUND SAMPLE MEASURE	ON	ON	OFF	ON

THIRD ANGLE PROJECTION	TOLERANCES UNLESS SPECIFIED: LINEAR: XX: ±0.5 XX.X: ±0.25 XX.XX: ±0.1 ANGULAR: ±2°30' CONCENTRICITY: 0.10 FIM MACH. FILLET RAD. 0.5 MAX THREADS CLASS 2A OR 2B SURFACE TEXTURE N7 TO N6	DO NOT SCALE THIS DRAWING UNLESS OTHERWISE SPECIFIED, DIMENSIONS ARE IN MILLIMETRES. REMOVE BURRS AND SHARP EDGES.	ecotech 1492 Ferntree Gully Road Knoxfield, Australia, 3180	**SCALE:** 1:2 **SHEET 2 OF 2**	**SHEET SIZE:** A4	**MATERIALS:**	**TITLE:**
				THE INFORMATION CONTAINED IN THIS DRAWING IS THE SOLE PROPERTY OF ECOTECH. ANY REPRODUCTION IN PART OR AS A WHOLE WITHOUT THE WRITTEN PERMISSION OF ECOTECH IS PROHIBITED.			**PART NO:**

9.8 Block Wiring Schematic - (PN: D020105)

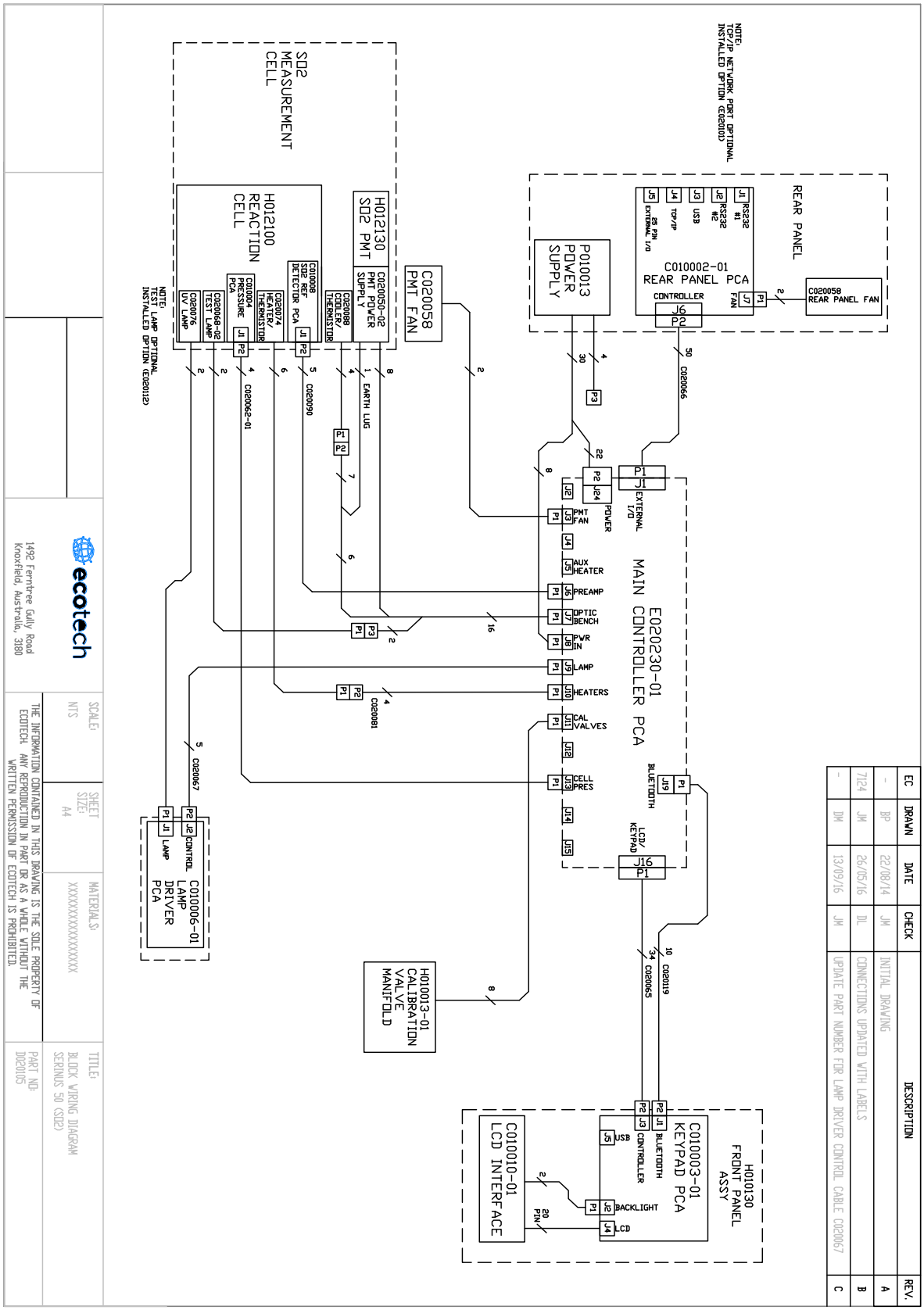

9.9 IZS Block Wiring Schematic - (PN: D020123)

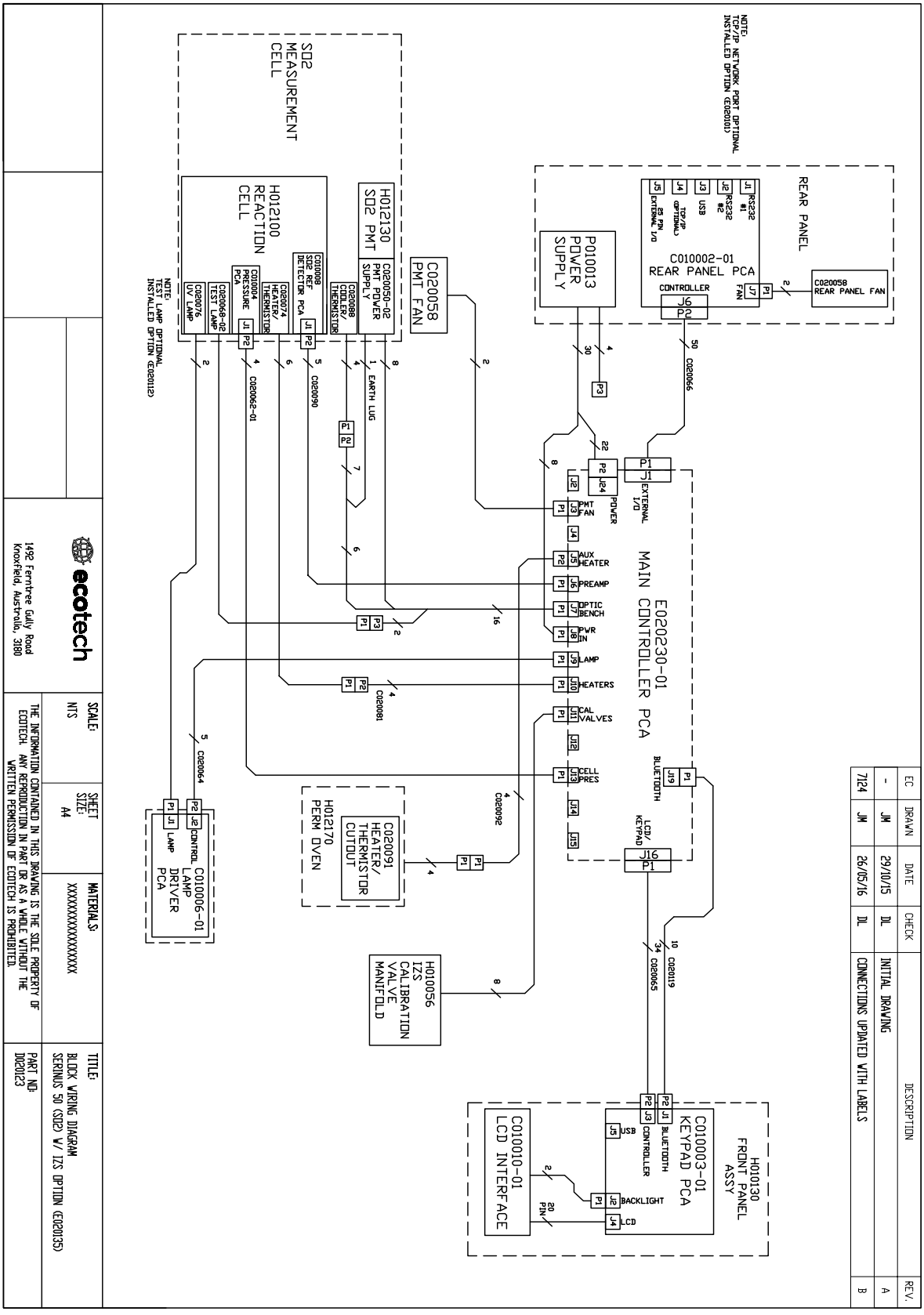

9.10 Optical Bench Assembly - (PN: H012130)

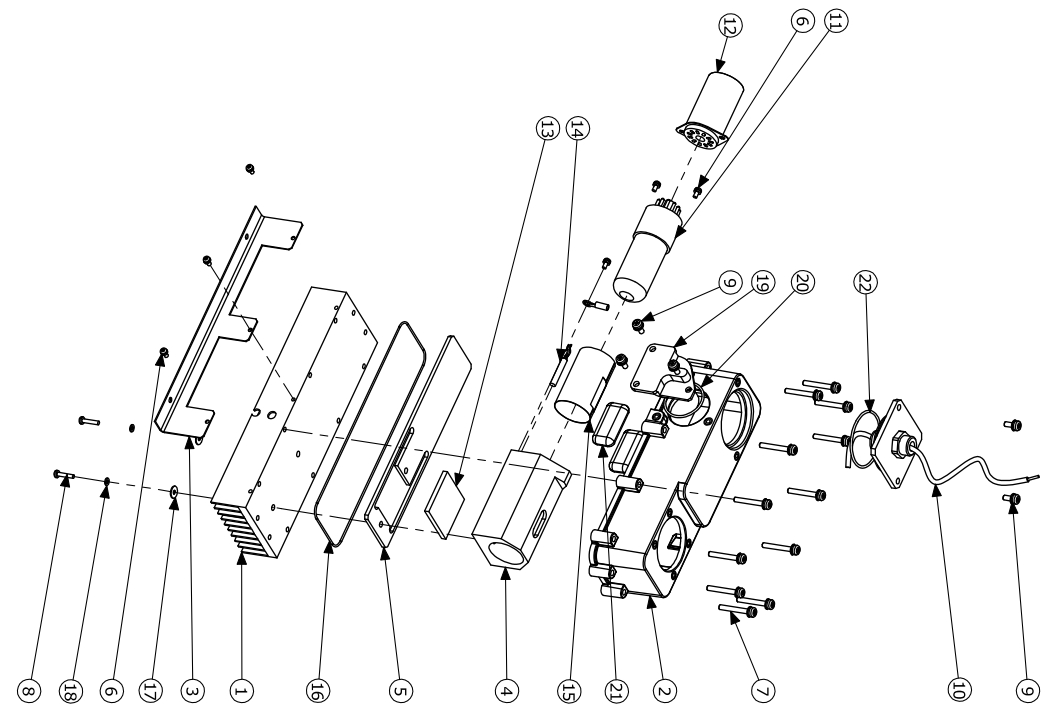

EC	DRAWN	DATE	CHECK	DESCRIPTION	REV.
7083	JM	12/03/2015	MT	DRAWING UPDATED TO REFLECT CORRECT BUILD	B
7171	ND	3/10/2016	JM	HOUSING H011212 REPLACES H011207, PLUG H011213, BS026 O-RING, AND 3x F050012 ADDED. DESICCANT PACK C050014 x2 ADDED.	C

ITEM NO.	PART NUMBER	DESCRIPTION	QTY.
1	H011209	HEATSINK SO2 AND NOX	1
2	H011212	HOUSING OPTBENCH, INJ MOULDED	1
3	H010006	BRACKET, HEATSINK, GASANALYZER	1
4	H011210	COLD BLOCK, SIDE ON PMT, GASANALYZER	1
5	H011208	SPACER HEATSHIELD, H SINK	1
6	F050011	M3X6 SEMS PAN HEAD PHILLIPS SCREW	6
7	F050024	M4 X 30 SEMS	12
8	FASM3SS-5	M3X16 PAN HEAD PHILLIPS SCREW	2
9	F050012	M4 X 10 SEMS	5
10	C020050-02	CABLE, PMT, SO2, GASANALYSER	1
11	H012132	TUBE SIDE ON PMT, R1527 PHOTOMULTIPLIER TUBE SO2	1
12	H012131	POWER SUPPLY	1
13	H011202	THERMOELECTRIC COOLER, 12VDC ** WITH 8" LEADS	1
14	S030006	THERMISTOR ASSY ENCASEMENT	1
15	H011204	SHIELD RFI,SIDE ON PMT	1
16	O010018	O-RING 5 3/4ID X 3/32W, VITON	1
17	F050041	WASHER, FLAT, M3 x 10mm, ZP	2
18	3 mmx6	M3x6 FLAT WASHER	2
19	H011213	PLUG HOUSING, OPTICAL BENCH	1
20	250004194	O-RING 1.739ID X 0.07W, VITON	1
21	C050014	DESSICANT 5 GRAM PACK	2
22	O010022	O-RING 1.739ID X 0.07W, VITON	1

THIRD ANGLE PROJECTION

TOLERANCES UNLESS SPECIFIED:
LINEAR: XX: ±0.5
XX.X: ±0.25
XX.XX: ±0.1
ANGULAR: ±2°30'
CONCENTRICITY: 0.10 FIM
MACH. FILLET RAD. 0.5 MAX
THREADS CLASS 2A OR 2B
SURFACE TEXTURE N7 TO N6

DO NOT SCALE THIS DRAWING

UNLESS OTHERWISE SPECIFIED,
DIMENSIONS ARE IN MILLIMETRES.
REMOVE BURRS AND SHARP EDGES.

ecotech
1492 Ferntree Gully Road
Knoxfield, Australia, 3180

SCALE:
SHEET SIZE: A4
SHEET 1 OF 1

MATERIALS:

THE INFORMATION CONTAINED IN THIS DRAWING IS THE SOLE PROPERTY OF ECOTECH. ANY REPRODUCTION IN PART OR AS A WHOLE WITHOUT THE WRITTEN PERMISSION OF ECOTECH IS PROHIBITED.

TITLE: OPTICAL BENCH ASSY, SO2, GAS ANALYZER

PART NO: H012130

9.11 Reaction Cell Assembly - (PN: H012100)

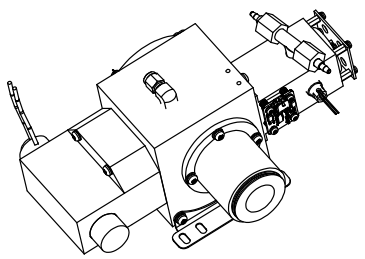

ITEM NO.	PART NUMBER	DESCRIPTION	Default/QTY.
1	H012101-01	REACTION CELL, SO2	1
2	H012106	PLUG, SO2 CELL	1
3	ORI-1019	O-RING BS038, VITON	1
4	H012109	BAFFLE	1
5	O010028	O-RING 1.364ID X 0.070W	1
6	H012110	DUMP ASSLY, SO2, GAS ANALYZER	1
7	O010029	O-RING 0.799ID X 0.103W	1
8	H012114	FILTER GLASS, U-340	1
9	H012102	RETAINER, PMT FILTER, SO2	1
10	O010027	O-RING 0.987ID X 0.103W	1
11	H012117	LENS PLANO-CONVEX	1
12	H012103	RETAINER, LENSE, CONVEX	1
13	H012120	LAMP HOLDER ASSLY, SO2, GAS ANALYZER	1
14	SEMSPH4BY10	M4X10 SEMS PAN HEAD PHILLIPS SCREW	15
15	H012105	BRACKET, CELL, SO2	2
16	SEMSPH4BY16	M4X16 SEMS PAN HEAD PHILLIPS SCREW	4
17	PH4BY40	M4X40 PAN HEAD PHILLIPS SCREW	4
18	CSK M4 by 6	M4X6 CSK PHILLIPS SCREW	4
19	C020074	HEATER AND THERMISTOR ASSY, DUAL, SERINUS	1
20	PH4BY6	M4X6 PAN HEAD PHILLIPS SCREW	2
21	H012126	OPTICAL BENCH ADAPTOR ASSLY, SO2, GAS ANALYZER	1
22	-	M4 SPRING WASHER	4
23	F030033-01	FITTING KYNAR MALE BRANCH TEE 1/4T - 1/8NPT	1
24	H010043-19	ORIFICE 20 ML	1
25	O010013	O-RING 5/32ID X 1/16W, VITON	2
26	H010007	ADAPTOR, 1/4" FITTING TO 1/8" BARB	2
27	F030025	FITTING SWAGELOK MALE ELBOW 1/8T - 1/8NPT S/S	1
28	O010042	O-RING, BS032, VITON	1
29	H010043-11	ORIFICE 12 MIL	1

EC	DRAWN	DATE	CHECK	DESCRIPTION	REV.
-	V.C.	14/01/08	M.S.	INITIAL DRAWING	X1
	VC	17/02/10		FILTER CHANGED FROM 002-035300 TO H012114	B
	VC	2/07/13	MT	ORI-1019 WAS O010006	C
7022	BP	9/08/2013	JM	O-RING ADDED	D
7083	JM	12/03/2015	MT	OIRIFICE LOCATION CORRECTED TO REFLECT PRODUCTION BUILD, NOTE ADDED FOR CONVEX MIRROR	E
7155	JM	9/05/2016	ND	SAMPLE ORIFICE CORRECTED TO 12 ML (H010043-11)	F

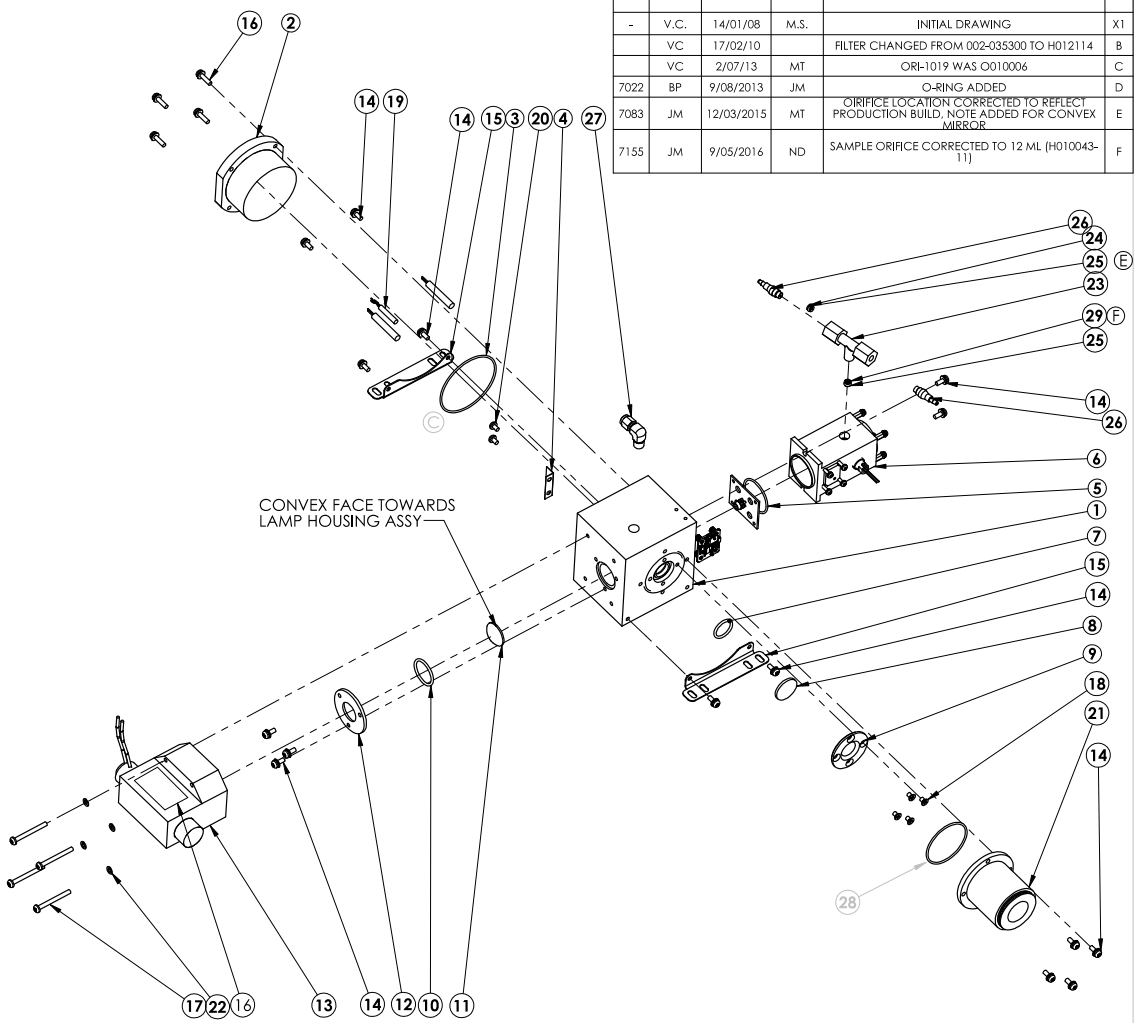

THIRD ANGLE PROJECTION

TOLERANCES UNLESS SPECIFIED:
LINEAR: XX: ±0.5
XX.X: ±0.25
XX.XX: ±0.1
ANGULAR: ±2°30'
CONCENTRICITY: 0.10 TIM
MACH. FILLET RAD. 0.5 MAX
THREADS CLASS 2A OR 2B
SURFACE TEXTURE N7 TO N6

DO NOT SCALE THIS DRAWING

UNLESS OTHERWISE SPECIFIED, DIMENSIONS ARE IN MILLIMETRES. REMOVE BURRS AND SHARP EDGES.

ecotech
1492 Femtree Gully Road
Knoxfield, Australia, 3180

SCALE: | SHEET SIZE: A4 | MATERIALS: – | TITLE: REACTION CELL ASSY, SO2, GAS ANALYZER

SHEET 1 OF 1

THE INFORMATION CONTAINED IN THIS DRAWING IS THE SOLE PROPERTY OF ECOTECH. ANY REPRODUCTION IN PART OR AS A WHOLE WITHOUT THE WRITTEN PERMISSION OF ECOTECH IS PROHIBITED.

PART NO: H012100

9.12 Lamp Holder Assembly - (PN: H012120)

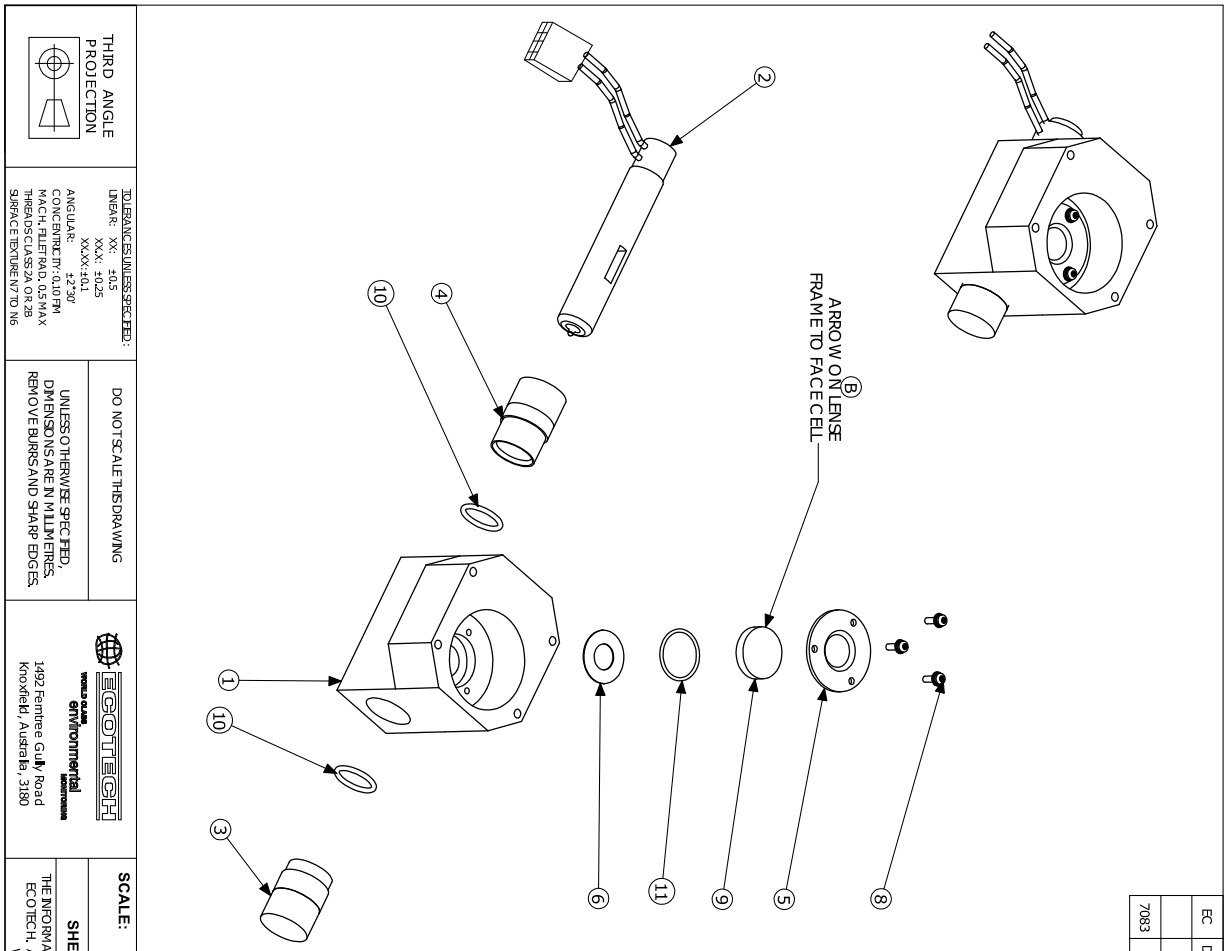

ITEM NO.	PART NUMBER	DESCRIPTION	QTY.
1	H012121	LAMP HOLDER, SO2 CELL	1
2	C020076	LAMP ASSY, UV, SO2, GAS ANALYZER	1
3	H012125	COLLET, SHORT, UV LAMP	1
4	H012124	COLLET, LONG, UV LAMP	1
5	H012123	RETAINER, LAMP FILTER, SO2	1
6	H012122	BAFFLE, LAMP, SO2 CELL	1
8	F050010	M3X10 SEMI SPAN HEAD PHILLIPS SCREW	3
9	H012116	LENS UV FILTER	1
10	O010004	O-RING BS115, VITON	2
11	O010026	O-RING 7/8D X 1/16W, VITON	1

EC	DRAWN	DATE	CHECK	DESCRIPTION	REV.
	V.C.	27/03/08	D.B.	INITIAL DRAWING	A
7083	JM	12/03/2015	MT	NOTE ADDED FOR H012116, UV LAMP MOVED TO REFLECT CORRECT FITMENT	B

THIRD ANGLE PROJECTION

TOLERANCES UNLESS SPECIFIED:
LINEAR: XX: ±0.5, XX.X: ±0.25, XX.XX: ±0.1
ANGULAR: ±2°30'
CONCENTRIC TO 0.10 FIM
MACH. FILLET RAD. 0.5 MAX
THREADS CLASS 2A OR 2B
SURFACE TEXTURE N7 TO N6

DO NOT SCALE THIS DRAWING

UNLESS OTHERWISE SPECIFIED, DIMENSIONS ARE IN MILLIMETRES. REMOVE BURRS AND SHARP EDGES.

ECOTECH
World Class Environmental Instruments
1492 Ferntree Gully Road
Knoxfield, Australia. 3180

SCALE:
SHEET SIZE: A4
SHEET 1 OF 2
MATERIALS:

THE INFORMATION CONTAINED IN THIS DRAWING IS THE SOLE PROPERTY OF ECOTECH. ANY REPRODUCTION IN PART OR AS A WHOLE WITHOUT THE WRITTEN PERMISSION OF ECOTECH IS PROHIBITED.

TITLE: LAMP HOLDER ASSY, SO2, GAS ANALYZER

PART NO: H012120

9.13 Dump Assembly - (PN: H012110)

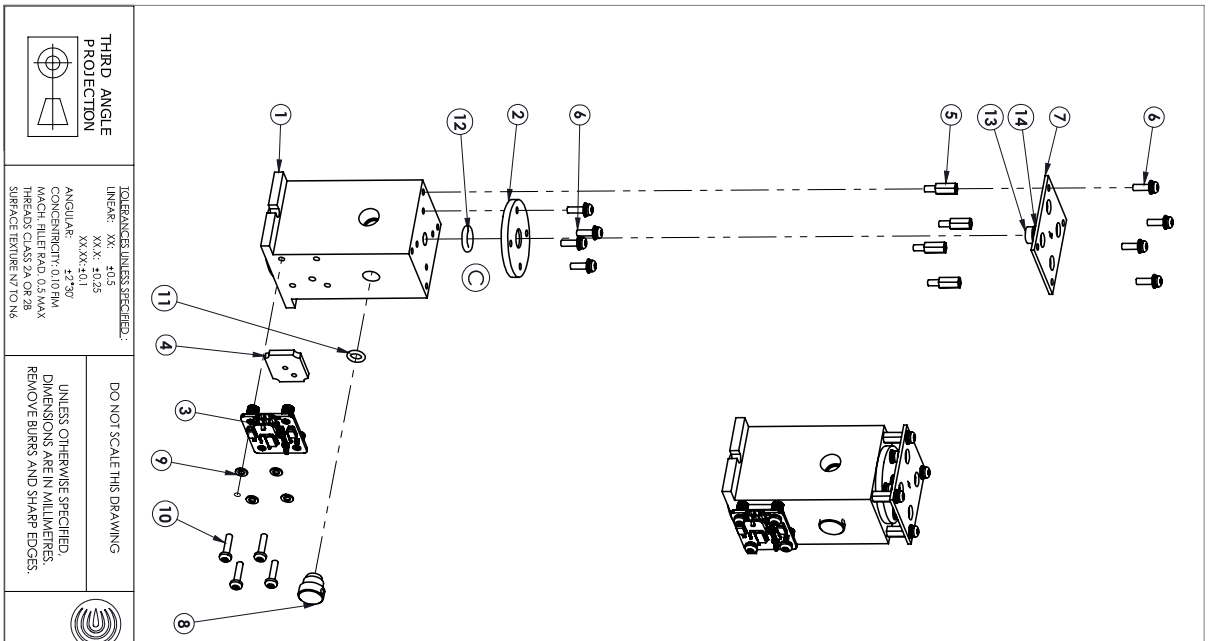

REV.	DESCRIPTION	DATE	CHECK	DATE	DRAWN
A	INITIAL DRAWING	26/03/08	D.B.	-	V.C.
B	C010008 NOW AN ASSEMBLY FOR CLARITY	12/03/15	MT	-	JM
C	O-RING MOVED BELOW RETAINER	02/07/20	JM	04/07/20	SS

ITEM NO.	PART NUMBER	DESCRIPTION	QTY.
1	H012111	DUMP, SO2	1
2	H012112	RETAINER, REFERENCE SENSOR-SO2	1
3	C010004	PCA, PRESSURE GAUGE, GAS ANALYZER	1
4	H010037	GASKET,PRESSURE SENSOR	1
5	-	SPACER, HEX, 10mm, MALE-FEMALE	4
6	F050010	M3X10 SEMS PAN HEAD PHILLIPS SCREW	8
7	C010008	PCA SO2 REF DETECTOR GAS ANALYZER	1
8	H010026	PLUG, TEST LAMP	1
9	-	M3 SPRING WASHER	4
10	PH3BY12	M3X12 PAN HEAD PHILLIPS SCREW	4
11	O010021	O-RING 0.208ID X 0.07W	1
12	O010031	O-RING 5/16 X 1/2 X 3/32 VITON	1
13	S030007	DIODE PHOTO-DETECTOR SO2	1
14	H012127	SPACER TO-5 Bivar # 514-240	1

THIRD ANGLE PROJECTION

TOLERANCE UNLESS SPECIFIED:
LINEAR: XX: ±0.5
XX.X: ±0.25
XX.XX: ±0.1
ANGULAR: ±2°30'
CONCENTRICITY: 0.10 FIM
MACH. FILLET RAD. 0.5 MAX
THREADS: CLASS 2A OR 2B
SURFACE TEXTURE N7 TO N6

DO NOT SCALE THIS DRAWING

UNLESS OTHERWISE SPECIFIED, DIMENSIONS ARE IN MILLIMETRES. REMOVE BURRS AND SHARP EDGES.

acoem
ECOTECH
1492 Ferntree Gully Road
Knoxfield, Australia, 3180

SCALE: 1:3
SHEET SIZE: A4
SHEET 1 OF 2
MATERIALS: -
TITLE: DUMP ASSY, SO2, SERINUS
PART NO: H012110

THE INFORMATION CONTAINED IN THIS DRAWING IS THE SOLE PROPERTY OF ECOTECH. ANY REPRODUCTION IN PART OR AS A WHOLE WITHOUT THE WRITTEN PERMISSION OF ECOTECH IS PROHIBITED.

9.14 Permeation Oven Assembly - (PN: H012170)

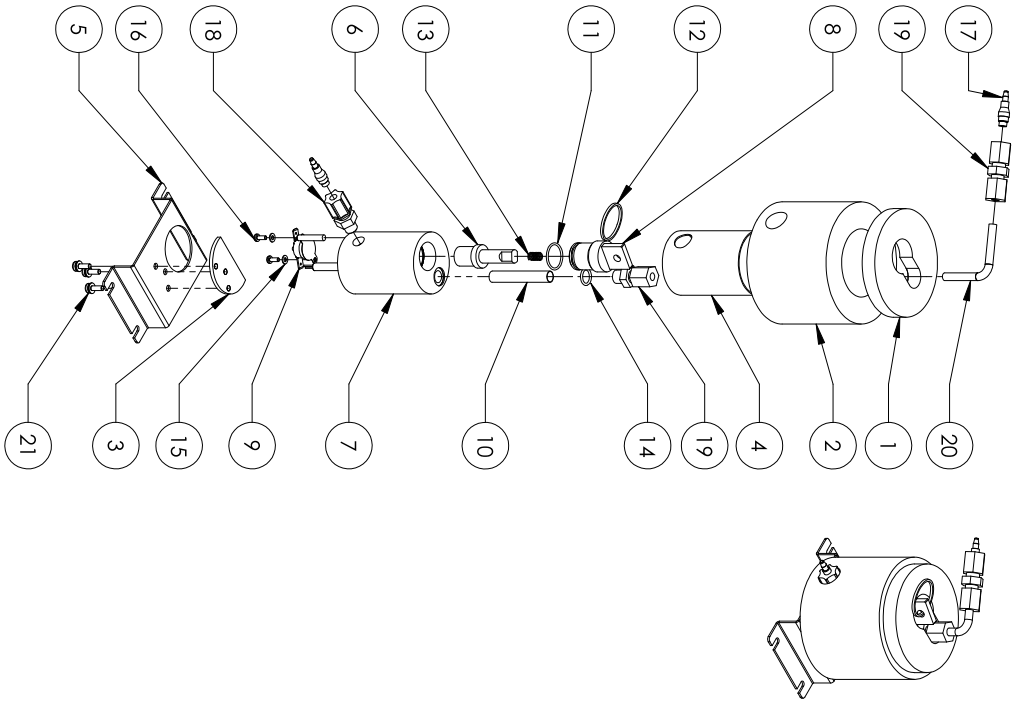

ITEM NO.	PART NUMBER	DESCRIPTION	QTY.
1	98000217	INSULATOR, FRONT, PERM CHAMBER	1
2	98000216	INSULATOR TUBE, PERM CHAMBER	1
3	98000220	INSULATOR, PERM CHAMBER BRACKET	1
4	95080027	INSULATOR, PERM CHAMBER	1
5	H011142	BRACKET, PERM OVEN	1
6	REF.	PERM TUBE (FOR REFERENCE)	1
7	98000212	PERM CHAMBER	1
8	98000213	PLUG, PERM CHAMBER	1
9	C020091	HEATER AND THERMISTOR ASSY, IZS, SERINUS	1
10	95080024	SCREEN, PERM CHAMBER	1
11	25000447-018	O-RING 3/4ID X 1/16W, VITON 2-018	1
12	28250003-221	SPLIT RING, ST-ZI, 1 1/4" DIA	1
13	H010040	SPRING COMPRESSION, 0.24 DIA 0.630 mm wire	1
14	O010011	O-RING 0.426ID X 0.070W	1
15	FAS-M3ZP-21	WASHER, FLAT, M3	2
16	PH3BY8	M3X8 PAN HEAD PHILLIPS SCREW	2
17	H010007	ADAPTOR, 1/4" FITTING TO 1/8" BARB	2
18	F030020	FITTING KYNAR MALE CONNECTOR 1/4T - 1/8NPT	1
19	F030022	FITTING KYNAR UNION 1/4T - 1/4T	2
20	TUB-1007	TUBING TEFLON 1/4 MEDIUM WALL 1/4 X 5/32 NAT FEP	80mm
21	F050023	M4 X 12 SEMS	3

EC	DRAWN	DATE	CHECK	DESCRIPTION	REV.
-	ND	13/08/2015	JM	INITIAL ISSUE	A

THIRD ANGLE PROJECTION

TOLERANCES UNLESS SPECIFIED:
LINEAR: XX: ±0.5
XX.X: ±0.25
XX.XX: ±0.1
ANGULAR: ±2°30'
CONCENTRICITY: 0.10 FIM
MACH. FILLET RAD. 0.5 MAX
THREADS CLASS 2A OR 2B
SURFACE TEXTURE N7 TO N6

DO NOT SCALE THIS DRAWING

UNLESS OTHERWISE SPECIFIED, DIMENSIONS ARE IN MILLIMETRES.
REMOVE BURRS AND SHARP EDGES.

ecotech
1492 Ferntree Gully Road
Knoxfield, Australia, 3180

SCALE: 1:5
SHEET SIZE: A4
SHEET 1 OF 1

MATERIALS: SEE INDIVIDUAL COMPONENTS

THE INFORMATION CONTAINED IN THIS DRAWING IS THE SOLE PROPERTY OF ECOTECH. ANY REPRODUCTION IN PART OR AS A WHOLE WITHOUT THE WRITTEN PERMISSION OF ECOTECH IS PROHIBITED.

TITLE: PERM OVEN ASSEMBLY, IZS, SERINUS

PART NO: H012170

9.15 Sample Filter Holder Assembly - (PN: H010160)

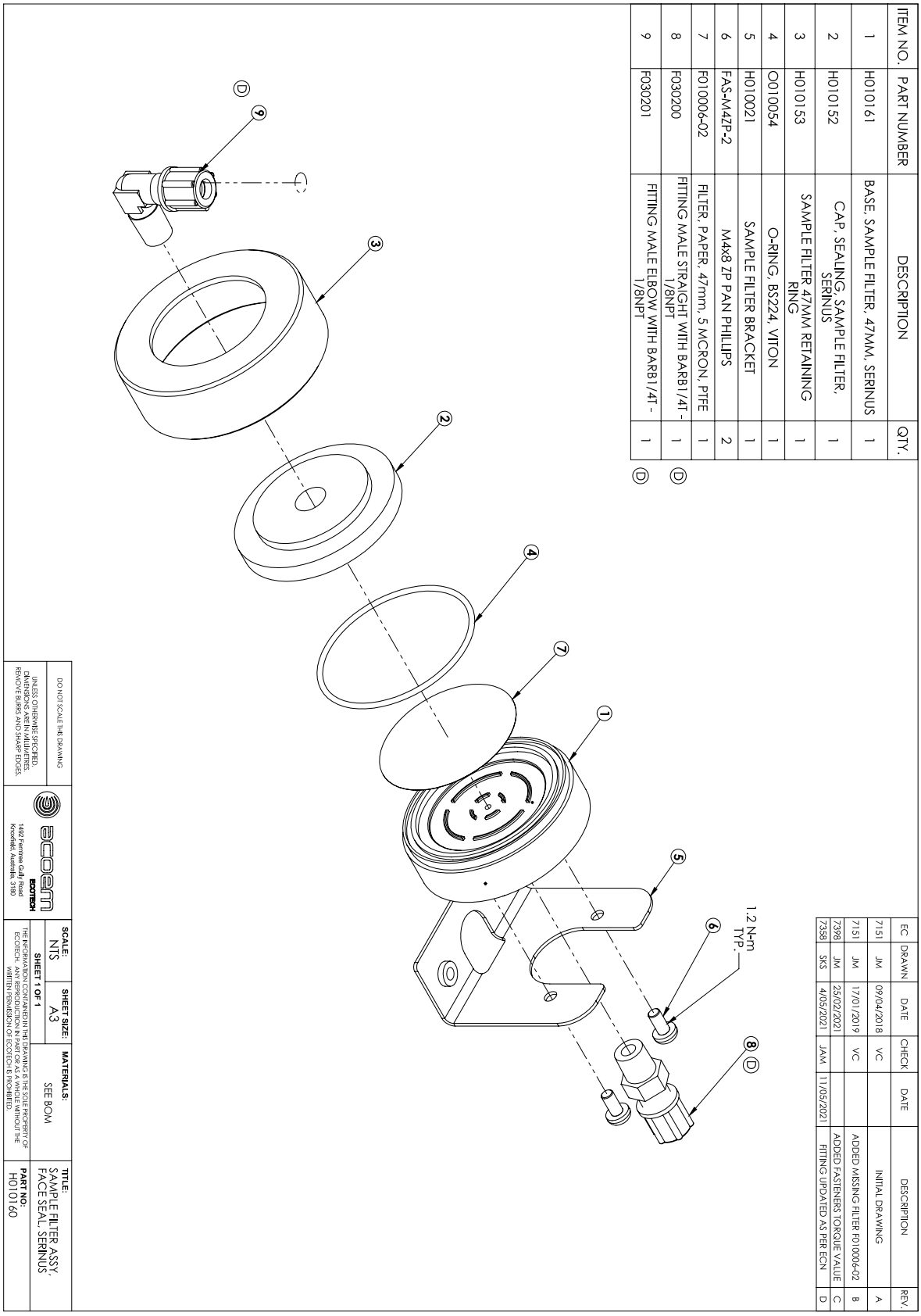

9.16 Calibration Valve Manifold Assembly - (PN: H010013-01)

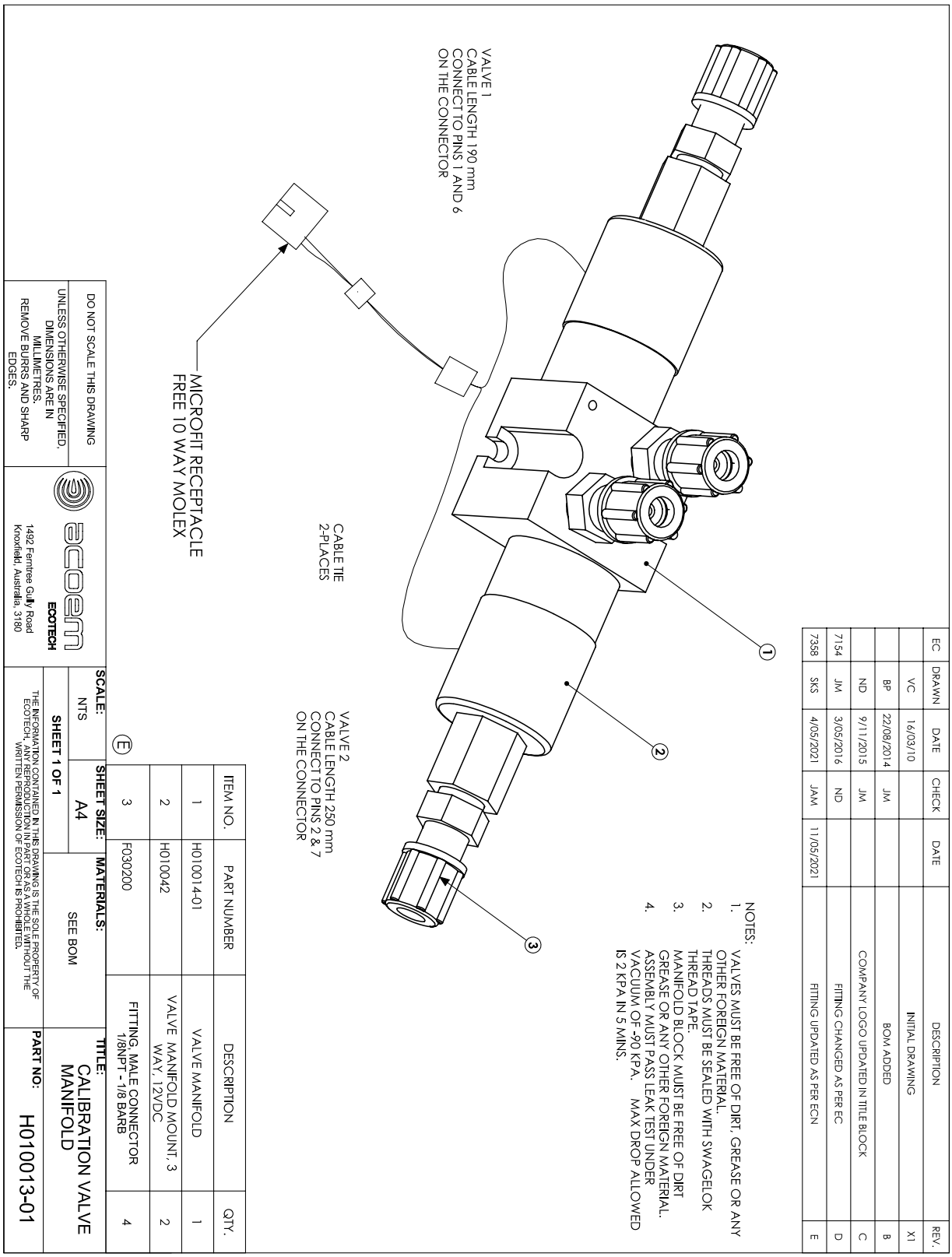

9.17 IZS Calibration Valve Manifold Assembly - (PN: H010056)

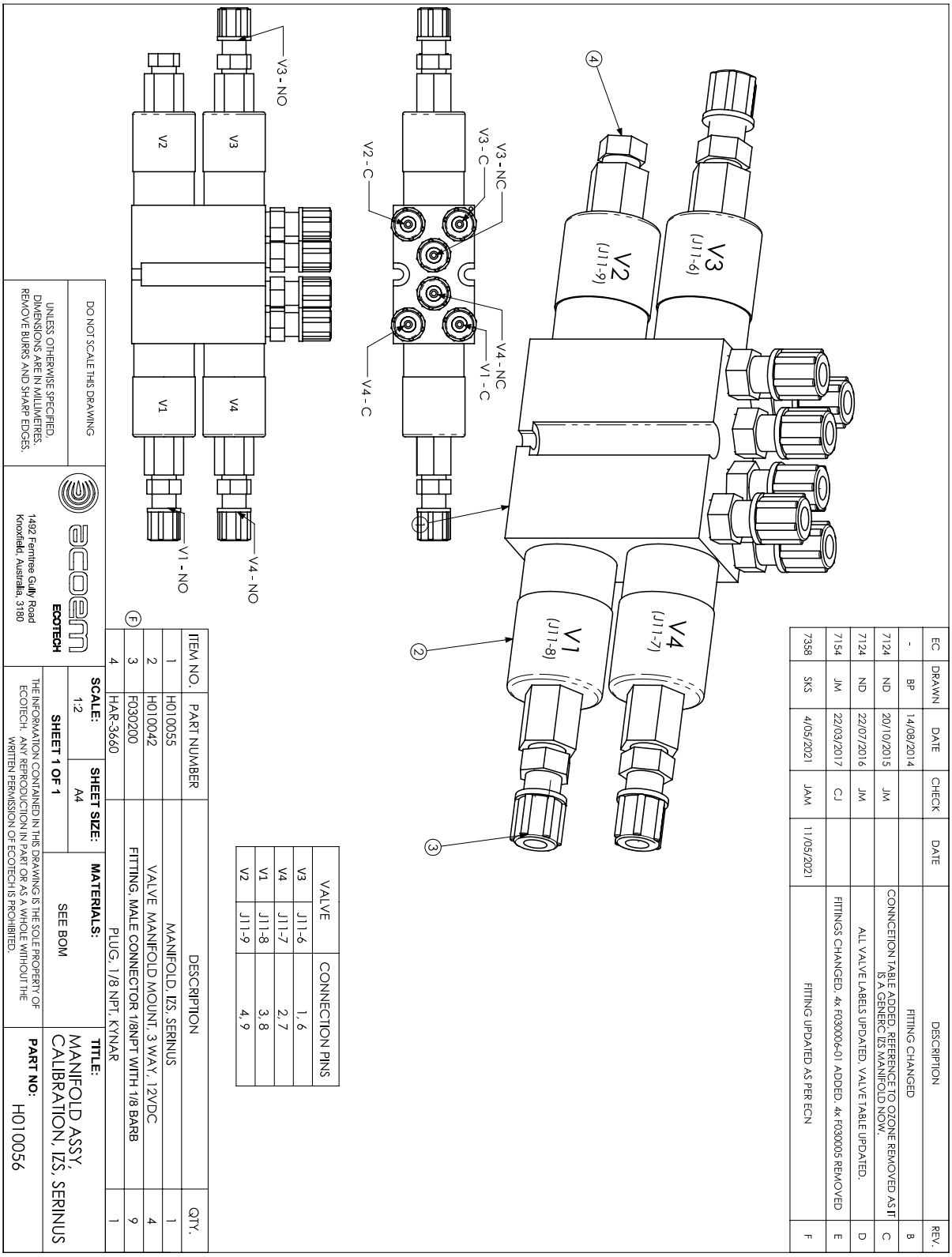

REV.	DESCRIPTION	DATE	CHECK	DATE	DRAWN	EC
B	FITTING CHANGED	14/08/2014			BP	-
C	CONNCETION TABLE ADDED, REFERENCE TO OZONE REMOVED AS IT IS A GENERIC IZS MANIFOLD NOW.	20/10/2015	JM		ND	7124
D	ALL VALVE LABELS UPDATED. VALVE TABLE UPDATED.	22/07/2016	JM		ND	7124
E	FITTINGS CHANGED. 4x F030006-01 ADDED. 4x F030005 REMOVED	22/03/2017	CJ		JM	7154
F	FITTING UPDATED AS PER ECN	11/05/2021	JAM	4/05/2021	SKS	7358

VALVE	CONNECTION PINS
V3	J11-6
	1, 6
V4	J11-7
	2, 7
V1	J11-8
	3, 8
V2	J11-9
	4, 9

ITEM NO.	PART NUMBER	DESCRIPTION	QTY.
1	H010055	MANIFOLD, IZS, SERINUS	1
2	H010042	VALVE MANIFOLD MOUNT, 3 WAY, 12VDC	4
3	F030200	FITTING, MALE CONNECTOR 1/8NPT WITH 1/8 BARB	9
4	HAR-3660	PLUG, 1/8 NPT, KYNAR	1

DO NOT SCALE THIS DRAWING

UNLESS OTHERWISE SPECIFIED:
DIMENSIONS ARE IN MILLIMETRES.
REMOVE BURRS AND SHARP EDGES.

acoem
ECOTECH
1492 Ferntree Gully Road
Knoxfield, Australia, 3180

SCALE: 1:2 | SHEET SIZE: A4 | SHEET 1 OF 1

MATERIALS: SEE BOM

TITLE: MANIFOLD ASSY, CALIBRATION, IZS, SERINUS

PART NO: H010056

THE INFORMATION CONTAINED IN THIS DRAWING IS THE SOLE PROPERTY OF ECOTECH. ANY REPRODUCTION IN PART OR AS A WHOLE WITHOUT THE WRITTEN PERMISSION OF ECOTECH IS PROHIBITED.

9.18 Valve Assembly - (PN: H010042)

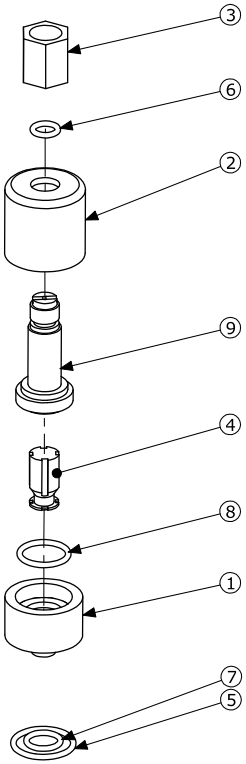

ITEM NO.	PART NUMBER	QTY.
1	BODY	1
2	SOLENOID COIL	1
10	NUT	1
4	PLUNGER	1
5	O010016	1
6	O010015	1
7	O010010	1
8	O010023	1
9	STEM	1

STEPS TO REPLACE O-RINGS:

1. MARK THE SOLENOID COIL WITH A PERMANENT MARKER TO IDENTIFY THEIR RESPECTIVE VALVES AND THEIR POSITION ON MANIFOLD BLOCK
2. SECURE THE 3-WAY VALVE UPRIGHT INTO A LARGE VICE WITH PROTECTION AROUND ITS BODY TO PREVENT SCRATCH OR DAMAGE TO VALVE
3. REMOVE NUT FROM THE TOP OF THE 3-WAY VALVE USING A 9/16" SPANNER
4. REMOVE SMALL O-RING FROM AROUND 3 WAY VALVE USING 2 MM FLAT SCREW DRIVER
5. LIFT OFF THE SOLENOID COIL FROM THE 3-WAY VALVE THEN UNCREW THE SHAFT FROM THE BASE USING A LARGE FLAT SCREW DRIVER. WHILE UNSCREWING TAKE CARE THAT THE INTERNAL PLUNGER DOES NOT FALL OUT
6. REPLACE THE INTERNAL O-RING WITH O010023
7. ASSEMBLE THE SHAFT ALONG WITH PLUNGER BACK IN ITS POSITION
8. ASSEMBLE THE SOLENOID WITH ITS RESPECTIVE VALVE.
9. ASSEMBLE NEW O010015 O-RING SUPPLIED
10. ASSEMBLE THE NUT ON TOP OF 3-WAY VALVE.
11. ASSEMBLE O010016 AND O010010 O-RINGS ON THE BOTTOM OF THE VALVE.
12. ASSEMBLE VALVE BACK IN MANIFOLD BLOCK

H010042
3 WAY VALVE SERVICE PROCEDURE

EC	DRAWN	DATE	CHECK	DESCRIPTION	REV.
	JM	04/12/2015	ND	INITIAL ISSUE	A
	JM	7/08/2018	VC	ADDED M12 WASHERS AND NOTES FOR MOUNTING	B

INSTRUMENT TYPE	ORIFICE PART NO.
S10 (O3)	H010043-09
S30/S31 (CO / CO2)	H010043-13
S40 (NOx)	H010043-11
S40H (NOx HIGH LEVEL)	H010043-03
S44 (NH3/NOx)	H010043-11
S5X (SO2, H2S/SO2, H2S, TS, TRS)	H010043-13

NOTES. (B)
1. FITTING TO BE MOUNTED FROM OUTSIDE OF INSTRUMENT IN FOLLOWING ORDER: FITTING, INSTRUMENT REAR PANEL, STAR WASHER, FLAT WASHER, RETAINING NUT
2. STAMPED 'V' ON FITTING DENOTES DIRECTION OF FLOW AND ORIENTATION OF VALVE
3. ASSEMBLY TO MOUNTED WITH VALVE END INSIDE OF INSTRUMENT

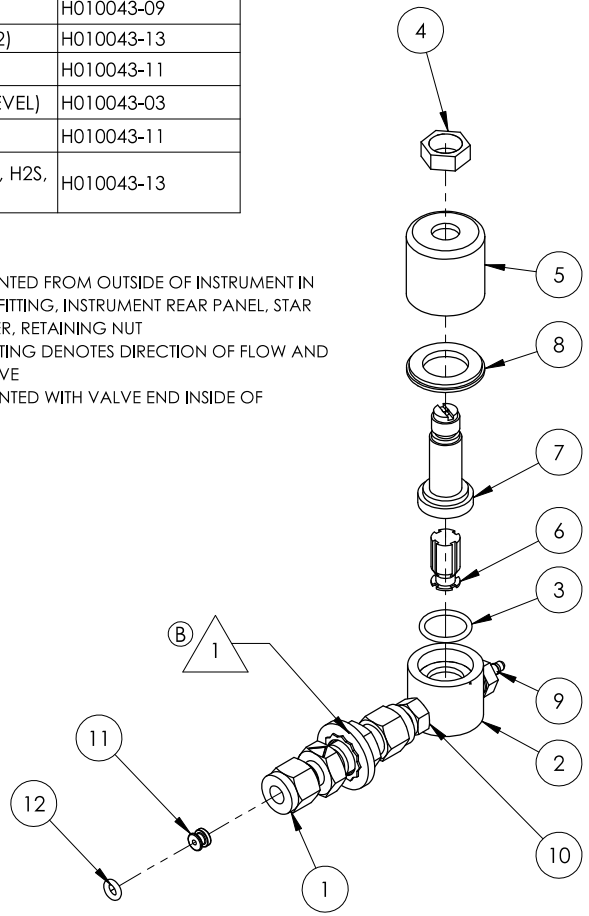

ITEM NO.	PART NUMBER	DESCRIPTION	QTY.
1	98300076	FITTING, BULKHEAD, 1/4T S/S, MODIFIED	1
2	BASE	BASE, VALVE, 2 WAY, 12 VDC	1
3	O010023	O-RING BS038, SILICONE	1
4	NUT	NUT, VALVE, 2 WAY, 12 VDC	1
5	COIL	SOLENOID COIL, VALVE, 2 WAY, 12 VDC	1
6	PLUNGER	PLUNGER, VALVE, 2 WAY, 12 VDC	1
7	STEM	STEM, VALVE, 2 WAY, 12 VDC	1
8	WASHER	WASHER, VALVE, 2 WAY, 12 VDC	1
9	F030006-01	FITTING, MALE CONNECTOR 1/8NPT - 1/8 BARB, KYNAR	1
10	28590462-3	Male Adapter (Tappered Thread)	1
11	H010043-XX	ORIFICE	1
12	O010013	O-RING 5/32ID X 1/16W, VITON	1
(B) 13	F050131	M12 INTERNAL STAR WASHER	1
(B) 14	F050130	WASHER, FLAT, M12, SS	1

THIRD ANGLE PROJECTION

TOLERANCES UNLESS SPECIFIED
LINEAR: XX: ±0.5, XX.X: ±0.25, XX.XX±0.1
ANGULAR: ±2°30'
CONCENTRICITY: 0.10 FIM
MACH. FILLET RAD. 0.5 MAX
THREADS CLASS 2A OR 2B
SURFACE TEXTURE N7 TO N6

DO NOT SCALE THIS DRAWING

UNLESS OTHERWISE SPECIFIED, DIMENSIONS ARE IN MILLIMETRES. REMOVE BURRS AND SHARP EDGES.

Ecotech
1492 Ferntree Gully Road
Knoxfield, Australia, 3180

SCALE: 1:2 | SHEET SIZE: A4 | SHEET 1 OF 1

MATERIALS: AS PER BOM

TITLE: VALVE ASSY, HIGH PRESSURE, SERINUS

PART NO: H050043

THE INFORMATION CONTAINED IN THIS DRAWING IS THE SOLE PROPERTY OF ECOTECH. ANY REPRODUCTION IN PART OR AS A WHOLE WITHOUT THE WRITTEN PERMISSION OF ECOTECH IS PROHIBITED.

This page is intentionally blank.

Appendix A. Advanced Protocol

The Advanced protocol allows access to the full list of instrument parameters.

A.1 Command Format

All commands and responses sent to and from the Instrument will be in the following packet format to ensure data is reliable.

Table 41 – Packet Format

1	2	3	4	5	6 … 5+n	6+n	7+n
STX (2)	Serial ID	Command	ETX (3)	Message Length (n)	Message	Checksum	EOT (4)

Where:

<STX>	ASCII Start of Text = 0x02 hex.
Serial ID	The Serial ID assigned in the **Main Menu → Communications Menu → Serial Communication Menu**.
<ETX>	ASCII End of Text = 0x03 hex.
Checksum	The XOR of the individual bytes except for STX, ETX, EOT and Checksum.
Message length	Must be in the range 0 - 32. Responses from the instrument can have a message Length of 0 - 255.
<EOT>	ASCII End of Transmission = 0x04 hex.

Examples

A basic request for Primary gas data would be as follows:

Table 42 – Example: Primary Gas Request

Byte Number	1	2	3	4	5	6	7	8
Description	STX	ID	Command	ETX	Message Length	Primary Gas Conc	Checksum	EOT
Value	2	0	1	3	1	50	50	4
Checksum Calculation		0	0⊕1=1		1⊕1=0	0⊕50=50	50	

And a sample response:

Table 43 – Example: Primary Gas Response

Byte Number	1	2	3	4	5	6	Continued in next table.
Description	STX	ID	Command	ETX	Message Length	Primary Gas Conc	
Value	2	0	1	3	5	50	
Checksum Calculation		0	0⊕1=1		1⊕5=4	4⊕50=54	

Table 44 – Example: Primary Gas Response (Continued)

Byte Number	7	8	9	10	11	12
Description	IEEE representation of 1.00				Checksum	EOT
Value	63	128	0	0	50	4
Checksum Calculation	54⊕63=9	9⊕128=137	137⊕0=137	137⊕0=137	137	

A.2 Commands

A.2.1 Communication Error

Where:

Command byte 0

Message byte 1 0

Message byte 2 0..7

If the command byte of a response is 0, this indicates an error has occurred. The message field will be 2 bytes long, where the 2nd byte indicates the error according to the following table.

Table 45 – List of Errors

Error #	Description
0	Bad Checksum received
1	Invalid Parameter Length
2	Invalid Parameter
3	Internal Data Flash Erase in Progress unable to return data for a few seconds
4	Unsupported Command.
5	Another process is collecting data - unable to service request.

Error #	Description
6	MemStick No Connected
7	MemStick Busy

A.2.2 Get IEEE Value

Where:

Command byte 1

Message byte 1 Index from List of Parameters

Message byte 2..32 Additional indexes (optional)

This command requests the value of an instrument parameter. The message field byte contains the index of the parameter requested, as described in the List of Parameters.

Up to 32 indexes can be supplied in a single request. The response has 5 bytes for each parameter requested - the first byte is the parameter index and the next four are the IEEE representation of the current value.

Example

A request with a message field of 50,51,52 to a Serinus S40 would return a 15 byte message as shown below:

Table 46 – Example: Get IEEE Response data

1	2	3	4	5	6	7	8	9	10	11	12	13	14	15
50	NO reading				51	NOx reading				52	NO2 reading			

A.2.3 Set Calibration Mode

Where:

Command byte 4

Message byte 1 85

Message byte 2 - 5 The IEEE representation of 0, 1, 2, or 3

0 puts the instrument into Measure mode (0,0,0,0)

1 puts the instrument into Cycle mode (63,128,0,0)

2 puts the instrument into Zero mode (64,0,0,0)

3 puts the instrument into Span mode (64,64,0,0)

This command puts the instrument into a calibration mode (the same as going to the Calibration menu and choosing a Cal. Mode).

Example

A request with a command of 4 and a message field of 85,64,64,0,0 would place the instrument into Span mode.

A.2.4 Set Calibration

Enters a new calibration value: the same as entering Span Calibrate or Zero Calibrate on the calibration menu.

Where:

Command byte 18

Message byte 1 0, 1, 2, or 3 where

0 = Span

1 = Zero (first zero gas)

2 = Zero (second zero gas)

3 = Zero (Third zero gas)

Message byte 2 - 5 The IEEE representation of the calibration value.

A.3 List of Parameters

Note: Parameters are for all Serinus series analysers and may not be applicable to an individual instrument.

Table 47 – Advanced Protocol Parameter List

#	Description	Notes
1	Cal/Zero Valve	0 = Zero, 1 = Cal
2	Internal Span Valve	0 = OFF, 1 = ON
3	+Analog Supply	Positive analog supply voltage
4	Gas 5 Avg.	Average of the readings (for Gas5) of the last n minutes where n is the averaging period E.g. Nx
5	Pregain	S30H linearization coefficient gain
6	Sample/Cal Valve	0 = Sample, 1 = Cal/Zero
7	NOx Measure Valve	0 = NO, 1 = NOx
8	NOx Bypass Valve	0 = NO, 1 = NOx
9	NOx Backgnd Valve	0 = OFF, 1 = ON
10	Valve Sequencing	0 = OFF, 1 = ON
11	LCD Contrast Pot	0 = Lightest, 255 = Darkest
12	SO2 Ref Zero Pot	S50 Reference zero pot
13	CO Input Pot	S30 Input pot
14	CO Reference Test Pot	Not Used

15	CO Test Measure Pot	Not Used
16	High Volt Adjust Pot	PMT High Voltage Adjust Pot for S50 & S40
17	SO2 Lamp Adjust Pot	S50 Lamp adjustment Pot
18	O3 Lamp Adjust Pot	S10 Lamp adjustment Pot
19	O3 Meas. Zero Pot (C)	S10 Signal zero measure (coarse)
20	O3 Meas. Zero Pot (F)	S10 Signal zero measure (fine)
21	PMT Fan Pot	Optical Bench fan speed control pot
22	Rear Fan Pot	Chassis Fan speed control pot
23	Pump Fine Pot	Internal Pump speed fine pot
24	Pump Coarse Pot	Internal Pump speed coarse pot
25	Analog input 0	SO2 Reference signal
26	Analog input 1	CO Reference signal
27	Analog input 2	O3 Reference signal
28	Analog input 3	SO2 & O3 Lamp current
29	Analog input 4	Flow block pressure
30	Analog input 5	Cell pressure
31	Analog input 6	Ambient pressure
32	Analog input 7	Raw ADC calibration input
33	Analog input 8	Reserved
34	Analog input 9	Concentration data
35	Analog input 10	Reserved
36	Analog input 11	Reserved
37	Analog input 12	Raw analog to digital count for external analog input 0. 0 - 5 V = 0 - 32766 A/D counts
38	Analog input 13	Raw analog to digital count for external analog input 1. 0 - 5 V = 0 - 32766 A/D counts
39	Analog input 14	Raw analog to digital count for external analog input 2. 0 - 5 V = 0 - 32766 A/D counts
40	Analog input 15	Reserved
41	CO Meas Zero Pot (C)	S30 Measure ZERO coarse adjustment Pot
42	CO Meas Zero Pot (F)	S30 Measure ZERO fine adjustment Pot
43	SO2 Input Pot	SO2 Measure Signal Gain Pot
44	SO2 Ref. Gain Pot	SO2 Reference Signal Gain Pot
45	SO2 Meas. Zero Pot	SO2 Measure zero pot
46	O3 Input Pot	O3 Input signal gain pot
47	Diagnostic Test Pot	The Diagnostic mode adjustment pot for all the analysers except for S30

48	NOx Input Pot	PMT signal input gain control for NOx
49	PGA Gain	1, 2, 4, 8, 16, 32, 64, 128
50	Gas 1 Inst.	Primary gas concentration currently displayed on the front screen E.g. NO
51	Gas 2 Inst.	Secondary gas concentration currently displayed on front screen E.g. NOx
52	Gas 3 Inst.	Calculated gas concentration currently displayed on front screen E.g. NO2
53	Gas 1 Avg.	Average of the readings (for Gas1) of the last n minutes where n is the averaging period
54	Gas 2 Avg.	Average of the readings (for Gas2) of the last n minutes where n is the averaging period
55	Gas 3 Avg.	Average of the readings (for Gas3) of the last n minutes where n is the averaging period
56	Instrument Gain	Current calibration value (default is 1.0)
57	Serial ID	Multidrop or Bayern-Hessen gas id
58	Bayern-Hessen ID	For multigas instruments only
59	Decimal Places	2 - 5
60	Noise	Instrument noise
61	Gas 1 Offset	An offset applied to Gas 1
62	Gas 3 Offset	An offset applied to Gas 3
63	Flow Temperature	Temperature of the flow block
64	Lamp Current	Lamp current in mA E.g 35 mA
65	+5V Supply	Digital Supply voltage (should always read close to 5 volts)
66	Conc. Voltage	Concentration Voltage
67	High Voltage	High Voltage reading for PMT
68	Ozonator	0 = OFF, 1 = ON
69	Control Loop	0 = OFF, 1 = ON (default is ON)
70	Diagnostic Mode	0 = Operate 1 = Preamp 2 = Electrical 3 = Optical (default is Operate)
71	Gas Flow	Units in slpm
72	Gas Pressure	Units in torr
73	Ambient Pressure	Units in torr
74	+12V Supply	The 12 volt Power supply voltage
75	Cell Temperature	Cell Temperature

<table>
<tr><td>76</td><td>Conv. Temperature</td><td>Converter Temperature</td></tr>
<tr><td>77</td><td>Chassis Temperature</td><td>Chassis Temperature</td></tr>
<tr><td>78</td><td>Manifold Temp.</td><td>Manifold Temperature</td></tr>
<tr><td>79</td><td>Cooler Temperature</td><td>Cooler Temperature</td></tr>
<tr><td>80</td><td>Mirror Temperature</td><td>Mirror Temperature</td></tr>
<tr><td>81</td><td>Lamp Temperature</td><td>Lamp Temperature</td></tr>
<tr><td>82</td><td>O3 Gen. Lamp Temp.</td><td>O3 Lamp Temperature</td></tr>
<tr><td>83</td><td>Instrument Status</td><td>Each bit in this 4-byte word represents a different condition (not all conditions apply to every instrument model):
<table>
<tr><th>BIT</th><th>Condition if set</th></tr>
<tr><td>0</td><td>Currently in warmup process</td></tr>
<tr><td>1</td><td>Volumetric units (ppm); otherwise gravimetric units (mg/m3)</td></tr>
<tr><td>2</td><td>Performing a background</td></tr>
<tr><td>3</td><td>Currently in Span mode</td></tr>
<tr><td>4</td><td>Currently in Zero mode</td></tr>
<tr><td>5</td><td>Instrument Out of Service (or in Diagnostic mode, PTF compensation or control loop disabled, or Comms debugging enabled)</td></tr>
<tr><td>6</td><td>High Voltage failure</td></tr>
<tr><td>7</td><td>System power failure (not actually possible to report)</td></tr>
<tr><td>8</td><td>Reference voltage failure</td></tr>
<tr><td>9</td><td>Cell temperature failure</td></tr>
<tr><td>10</td><td>Cooler failure</td></tr>
<tr><td>11</td><td>Converter failure</td></tr>
<tr><td>12</td><td>Correlation wheel failure</td></tr>
<tr><td>13</td><td>Lamp source failure</td></tr>
<tr><td>14</td><td>Flow fault</td></tr>
<tr><td>15</td><td>Any system error (the red instrument status light is ON)</td></tr>
</table></td></tr>
<tr><td>84</td><td>Reference Voltage</td><td>Units in Volts</td></tr>
<tr><td>85</td><td>Calibration State</td><td>This variable has two different sets of values:
<table>
<tr><th>Set Calibration State</th><th>Get IEEE Value</th></tr>
<tr><td>0 = MEASURE</td><td>0 = MEASURE</td></tr>
</table></td></tr>
</table>

		1 = CYCLE	1 = ZERO
		2 = ZERO	2 = SPAN
		3 = SPAN	
86	Primary Raw Conc.	(For S40, before NOx background and gain)	
87	Secondary Raw Conc.	Only for multigas instruments (For S40, before NOx background and gain)	
88	S40 Backgnd Conc.	NOx Background Concentration (For S40, before gain)	
89	Cal. Pressure	Calibration Pressure	
90	Conv. Efficiency	Converter Efficiency	
91	Multidrop Baud Rate	0 = 1200 bps 1 = 2400 bps 2 = 4800 bps 3 = 9600 bps 4 = 14400 bps 5 = 19200 bps 6 = 38400 bps	
92	Anlg Range AO 0	Maximum range value for analog output	
93	Anlg Range AO 1		
94	Anlg Range AO 2		
95	Output Type AO 0	Output Type 1 = Voltage 0 = Current	
96	Output Type AO 1		
97	Output Type AO 2		
98	Anlg Ofst/Rng AO 0	Voltage Offset /Current Range 0 = 0% or 0 - 20mA 1 = 5% or 2 - 20mA 2 = 10% or 4 - 20mA	
99	Anlg Ofst/Rng AO 1		
100	Anlg Ofst/Rng AO 2		
101	F/Scale Volt AO 0	5.0 Volt Calibration value	
102	F/Scale Volt AO 1		
103	F/Scale Volt AO 2		
104	Z Adj Volt AO 0	0.5 Volt Calibration value	
105	Z Adj Volt AO 1		
106	Z Adj Volt AO 2		
107	-Analog Supply	Negative analog supply	
108	Digital Outputs	A single byte expressing the most recent state of the digital outputs	
109	Digital Inputs	A single byte expressing the most recent state of the digital inputs	

110	Instrument State	0 = Sample Fill 1 = Sample Measure 2 = Sample Fill Aux 3 = Sample Measure Aux 4 = Sample Fill Aux2 5 = Sample Measure Aux2 6 = Background Fill 7 = Background Measure 8 = Background Purge 9 = Background Fill Aux 10 = Background Measure Aux 11 = Zero Fill 12 = Zero Measure 13 = Zero Fill Aux 14 = Zero Measure Aux 15 = Zero Fill Aux2 16 = Measure Aux2 17 = Background Fill Zero 18 = Background Measure Zero 19 = Span Fill 20 = Span Measure 21 = Span Fill Aux 22 = Span Measure Aux 23 = Span Fill Aux2 24 = Span Measure Aux2 25 = Background Fill Span 26 = Background Measure Span 27 = Background Purge Span 28 = Electronic Zero Adjust 29 = Instrument Warm Up 30 = Background Adjust Fill 31 = Background Adjust Measure
111	CO Lin. Factor A	CO Linearisation Factor A
112	CO Lin. Factor B	CO Linearisation Factor B
113	CO Lin. Factor C	CO Linearisation Factor C
114	CO Lin. Factor D	CO Linearisation Factor D
115	CO Lin. Factor E	CO Linearisation Factor E
116	Instrument Units	0 = ppm 1 = ppb 2 = ppt 3 = mg/m^3 4 = $\mu g/m^3$

		5 = ng/m³ 6 = %
117	Backgnd Meas. Time	In seconds. These parameters can be changed, but only temporarily; restarting the instrument will restore them to their default values.
118	Sample Fill Time	
119	Sample Measure Time	
120	Aux Measure Time	
121	Aux Smpl. Fill Time	
122	Backgnd Fill Time	
123	Zero Fill Time	
124	Zero Measure Time	
125	Span Fill Time	
126	Span Measure Time	
127	O3 Gen. Coeff D	O3 Generator Coefficient D
128	Backgnd Pause Time	In seconds
129	Bkgnd Intrleav Fact	
130	Cal. Pressure 2	Calibration Pressure for 2nd gas
131	2nd Instrument Gain	Only valid with an S40 variant set to multiple gains. Shows the second gas gain (NO). Default is 1.0.
132	Background voltage	Units in Volts
133	Perm Rate	Permeation rate of the gas in ng/min
134	Perm Flow	Total flow past the permeation chamber during an activated internal span mode. In ml/min
135	Perm Oven Setpoint	Set target temperature for the permeation oven. Default is 50 °C
136	Perm Oven Temp	Temperature readout of the Permeation oven. Units in °C
137	Ozone Target	Ozone Target for S10 IZS Ozone generation
138	Conc Adjusted 1	Concentration value in PPM before filtering
139	Conc Adjusted 2	
140	Conc Adjusted 3	
141	Chopper Speed	Revolutions in the last second
142	Chopper Frequency	In rpm
143	IR Source	The S30 IR source voltage
144	Background (hrs)	The background interval in hours. 0.0 if disabled 0.25 for every 15 minutes 0.30 for every 20 minutes 0.50 for every 30 minutes 1.00 for every hour 24.00 for once a day

145	Cycle Time	In minutes
146	CO Cooler Pot	CO Cooler voltage adjustment POT
147	CO Source Pot	CO Source voltage adjustment POT
148	CO Test Meas. Pot	Diagnostics use only
149	CO Test Ref. Pot	Diagnostics use only
150	O3 Ref Average	S10 Background Average
151	PTF Correction (gas 1)	Pressure Temperature Flow Compensation Factor for first gas
152	PTF Correction (gas 2)	Pressure Temperature Flow Compensation Factor for second gas in dual gas analysers.
153	Inst. Cell Pressure	Instantaneous cell pressure
154	Manifold Pressure	Manifold Pressure in S40 instruments
155	Cell Press. (gas 1)	Cell Pressure for Gas 1
156	Cell Press. (gas 2)	Cell Pressure for Gas 2
157	Cell Press. (Bgnd)	Cell Pressure when in Background
158	Background	0 = the instrument is measuring a gas sample 1 = the instrument is measuring background air
159	Gas To Measure	S51 only; see Measurement Settings Menu 0 = Measure both gasses 1 = Measure SO2 only 2 = Measure H2S only
160	Valve States	Diagnostic use only
161	Temperature Units	0 = "°C" 1 = "°F" 2 = "K"
162	Pressure Units	0 = "torr" 1 = "psi" 2 = "mbar" 3 = "atm" 4 = "kPa"
163	Averaging Period	0 = "1 Min" 1 = "3 Mins" 2 = "5 Mins" 3 = "10 Mins" 4 = "15 Mins" 5 = "30 Mins" 6 = "1 Hr" 7 = "4 Hrs" 8 = "8 Hrs" 9 = "12 Hrs" 10 = "24 Hrs"

		11 = ”4 hrs/hr” 12 = ”8 hrs/hr” 13 = “2 Mins” 14 = “4 Mins” 15 = “6 Mins” 16 = “12 Mins” 17 = “20 Mins” 18 = “2 Hrs” 19 = “6 Hrs”
164	Filter Type	0 = NO FILTER 1 = KALMAN FILTER 2 = 10 SEC FILTER 3 = 30 SEC FILTER 4 = 60 SEC FILTER 5 = 90 SEC FILTER 6 = 300 SEC FILTER 7 = ADPTIVE FILTER
165	NO2 Filter enabled	0 = Disabled, 1 = Enabled
166	Background Interval	0 = 24 Hrs 1 = 12 Hrs 2 = 8 Hrs 3 = 6 Hrs 4 = 4 Hrs 5 = 2 Hrs 6 = Disable Note: this parameter is deprecated; while it can still be read, writing to it will have no effect. Use parameter 144 instead.
167	Service (COM1) Baud	Serial baud rate 0 = 1200 bps 1 = 2400 bps 2 = 4800 bps 3 = 9600 bps 4 = 14400 bps 5 = 19200 bps 6 = 38400 bps
168	Multidrop (COM2) Baud	
169	Service Protocol	0 = EC9800 1 = Bayern-Hessen 2 = Advanced 3 = Modbus
170	Multidrop Protocol	
171	AO1 Over Range	The Upper Concentration Range when Over-Ranging is enabled
172	AO2 Over Range	
173	AO3 Over Range	

174	AO1 Over-Ranging	0 = Over Ranging Disabled 1 = Over Ranging Enabled 2 = Over Ranging enabled and currently active
175	AO2 Over-Ranging	
176	AO3 Over-Ranging	
177	Heater Set Point	Cell Heater Set Point units in °C
178	High Volt Adjust Pot	High voltage pot setting
179	PMT Test LED Pot	PMT Test LED intensity controller POT
180	Last Power Failure	Time Stamp of the Last power fail (4 byte time stamp) Bit 31:26 ---- Year (0 - 99) Bit 25:22 ---- Month (1 - 12) Bit 21:17 ---- Date (1 - 31) Bit 16:12 ---- Hour (00 - 23) Bit 11:06 ---- Min (00 - 59) Bit 05:00 ---- Sec (00 - 59)
181	Inst Manifold Press.	Manifold Pressure in S40 instruments (instantaneous)
182	Cell Press. (Gas 5)	Cell Pressure for Gas 5 (Nx)
183	Gas 4 Inst.	Calculated gas concentration currently displayed on front screen E.g. NH3
184	Gas 4 Avg.	Average of the readings (for Gas 4) of the last n minutes where n is the averaging period E.g. NH3
185	Gas 5 Inst.	Calculated gas concentration currently displayed on front screen E.g. Nx
186	NH3 Conv. Efficiency	
187	Cell/Lamp Duty Cycle	
188	Mirror T. Duty Cycle	
189	Flow Temp Duty Cycle	
190	Cooler T. Duty Cycle	
191	Conv Temp Duty Cycle	
192	CO Conv T Duty Cycle	
193	F/Scale Curr AO 0	20 mA Calibration value
194	F/Scale Curr AO 1	
195	F/Scale Curr AO 2	
196	Z Adj Curr AO 0	4 mA Calibration value
197	Z Adj Curr AO 1	
198	Z Adj Curr AO 2	
199	Ext Analog Input 0	The value of the external analog input after the multiplier and offset have been applied
200	Ext Analog Input 1	
201	Ext Analog Input 2	
202	Conv Set Point	Converter Set Point

203	Cal. Pressure 3	Calibration Pressure 3
204	PTF Correction (gas 3)	Pressure Temperature Flow Compensation Factor for third gas in multi-gas instruments.
205	Dilution Ratio	The current dilution ratio (default is 1.0)
206	Traffic Light	State of the status light: 0 = Green 1 = Amber 2 = OFF (normally impossible) 3 = Red
207	Network Protocol	0 = EC9800 1 = Bayern-Hessen 2 = Advanced 3 = Modbus
208	Gas 4 Offset	An offset applied to Gas 4
209	O3 Gen. Fine Pot	Ozone generator control, DAC controlled. DAC: 0..64535
210	O3 Gen. Lamp Current	Units in mA
211	O3 Gen. Coarse Pot	Repeat of parameter 209
212	Logging Period	The data logging period, in seconds (1.. 86400)
213	O3 Gen. Coeff A	Ozone generator coefficients Note that Coeff D is parameter 127
214	O3 Gen. Coeff B	
215	O3 Gen. Coeff C	
216	Meas. Count	S60 measure count
217	Sig. Count 1	S60 signal counts
218	Sig. Count 2	
219	Sig. Count 3	
220	Sig. Count 4	
221	Signal Voltage	S60 signal voltage
222	LED Drive	S60 LED drive value
223	3rd Instrument Gain	Only valid with an S44 variant set to multiple gains. Shows the third gas gain (Nx). Default is 1.0.
224	Legacy PTF Method	Only applies to S40 variants. 0 = new PTF calculation 1 = old PTF calculation inherited from ML This value was added to Build 10800 and defaults to 1.
225	Chassis Humidity	Only applies to S30 variants, and only on Rev P or later boards. The current humidity inside the instrument, in percentage.
226	Opto. Strength	Only applies to Rev P or later boards. Optical signal strength.

Appendix B. EC9800 Protocol

The Serinus implements a subset of the 9800 instrument protocol. Only the basic commands of reading the concentration value and setting the instrument calibration state (measure, span or zero) are supported.

B.1 Command Format

All commands are sent as ASCII strings. Fields are delimited by commas and the command ends with the normal return key (i.e. the TERMINATOR is either a <CR> or a <LF>). The DEVICE I.D. is the Serial ID assigned in the **Main Menu → Communications Menu → Serial Communication Menu**. If the instrument is not being used in a multi-drop connection, the DEVICE I.D> can be replaced with the string "???".

B.2 Commands

B.2.1 DCONC

Function: Sends the current instantaneous concentration data to the serial port.

Format: DCONC, {<DEVICE I.D.>} {TERMINATOR}

Device response: {GAS} <SPACE> {STATUS WORD} <CR><LF>

The GAS value is the concentration value in the current instrument units, expressed as a floating point number (i.e. 12.345). The STATUS WORD indicates the instrument status in hex (i.e. A01F) using the following format:

Bit 15 = SYSFAIL (MSB)

Bit 14 = FLOWFAIL

Bit 13 = LAMPFAIL

Bit 12 = CHOPFAIL

Bit 11 = CVFAIL

Bit 10 = COOLERFAIL

Bit 9 = HEATERFAIL

Bit 8 = REFFAIL

Bit 7 = PS-FAIL

Bit 6 = HV-FAIL

Bit 5 = OUT OF SERVICE

Bit 4 = Instrument is in zero mode

Bit 3 = Instrument is in span mode

Bit 2 = Unused

Bit 1 = SET→PPM selected, CLEAR→MG/M3

Bit 0 = reserved (LSB)

B.2.2 DSPAN

Function: Commands the instrument to enter span mode.

Format: DSPAN, {<DEVICE I.D.>} {TERMINATOR}

Device response: <ACK> if the instrument is able to perform the command, <NAK> if not.

B.2.3 DZERO

Function: Commands the instrument to enter the zero mode.

Format: DZERO, {<DEVICE I.D.>} {TERMINATOR}

Device response: <ACK> if the instrument is able to perform the command, <NAK> if not.

B.2.4 ABORT

Function: Commands the instrument to abort the current span/zero mode and return to measure mode.

Format: ABORT, {<DEVICE I.D.>} {TERMINATOR}

Device response: <ACK> if the instrument is able to perform the command, <NAK> if not.

B.2.5 RESET

Function: Reboots the instrument (software reset).

Format: RESET, {<DEVICE I.D.>} {TERMINATOR}

Device response: <ACK>.

Appendix C. Bayern-Hessen Protocol

The Serinus implements a limited subset of the Bayern-Hessen Network protocol. Only the ability to set the instrument calibration state (measure, span or zero) and read the gas concentrations are supported.

C.1 Command Format

<STX><text><ETX>< bcc1><bcc2>

Where:

<STX>	ASCII Start of Text = 0x02 hex.
<Text>	ASCII text maximum length of 160 characters.
<ETX>	ASCII End of Text = 0x03 hex.
<bcc1>	ASCII representation of block check value MSB. (That is, the character “3” for 3, the character “F” for 15, etc.)
<bcc2>	ASCII representation of block check value LSB.

The block check algorithm begins with 0 and exclusive-OR’s each ASCII character from <STX> to <ETX> inclusive. This block check value is converted to ASCII format and sent after the <ETX> character.

Examples

This is an example of a valid Bayern-Hessen data request for an instrument that has a Serial ID of 97 (Serial ID assigned in the **Main Menu → Communications Menu → Serial Communication Menu**):

<STX>DA097<EXT>3A

The block check calculation is best shown by the following example:

Table 48 – Bayern-Hessen Data

Character	Hex Value	Binary	Block Check
<STX>	02	0000 0010	0000 0010
D	44	0100 0100	0100 0110
A	41	0100 0001	0000 0111
0	30	0011 0000	0011 0111
9	39	0011 1001	0000 1110
7	37	0011 0111	0011 1001
<ETX>	03	0000 0011	0011 1010

The binary value 0011 1010 corresponds to the hex value 3A. This value in ASCII forms the last two characters of the data request message.

Note: The I.D. of 97 is sent as the sequence 097. All I.D. strings must have three digits and must always be padded with ASCII zero characters.

This is an example of a valid command to put the unit in the manual span mode if the instrument has an ID of 843:

<STX>ST843 K<ETX>52

The block check operation is best shown with the following table:

Table 49 – Block Check Operation

Character	Hex Value	Binary	Block Check
<STX>	02	0000 0010	0000 0010
S	53	0101 0011	0101 0001
T	54	0101 0100	0000 0101
8	38	0011 1000	0011 1101
4	34	0011 0100	0000 1001
3	33	0011 0011	0011 1010
<SPACE>	20	0010 0000	0001 1010
K	4B	0100 1011	0101 0001
<ETX>	03	0000 0011	0101 0010

The binary block check value is 0101 0010 which is the hex value 52 as shown at the end of the command string.

C.2 Commands

C.2.1 DA

Return the current instantaneous concentration.

Command Format

<STX>{DA}{<kkk>}<ETX>< bcc1><bcc2>

Where:

kkk	Device's ID. This field is optional, but if provided it must be padded with zeros to be 3 characters long. The value must match one of the following: the instrument's Bayern-Hessen ID, 000, or ??? (three question marks).
bcc1	First byte of the block check calculation.
bcc2	Second byte of the block check calculation.

Device response

The instrument responds with a variable length string, depending on how many measured gasses have been assigned an ID above 0. The text between the [ ] will be repeated once for each reported gas.

<STX>{MD}{cc}[<SP><kkk><SP><+nnnn+ee><SP><ss><SP><ff><SP><mmm><SP>eeeeee<SP>]<ETC><bcc1><bcc2>

Where:

<SP>	Space (0x20 hex).
cc	The number of gasses reported (0..5). The text in between the [ ] will be repeated once for each gas reported.
kkk	The Bayern-Hessen instrument ID.
+nnnn+ee	Gas concentration.
ss	Status byte (see table below for individual bits).
ff	Failure byte (see table below for individual bits).
mmm	Gas ID.
eeeeee	Ecotech instrument ID.
bcc1	First byte of the block check calculation.
bcc2	Second byte of the block check calculation.

Table 50 – Status Bit Map

Status Bit	Meaning if set to 1
0	Instrument off (this value is always set to 0).
1	Out of service.
2	Zero mode.
3	Span mode.
4	-
5	-
6	Units: 1 = Volumetric, 0 = Gravimetric.
7	Background mode (S30 and S50 family only).

Table 51 – Failure Bit Map (Positive Logic)

Failure Bit	Meaning if set to 1
0	Flow sensor failure.
1	Instrument failure. Note that while the In Maintenance mode reports as an instrument failure with a red light on the front panel, for Bayern-Hessen this particular error is merely a status instead of a failure.

Failure Bit	Meaning if set to 1
2	-
3	Lamp failure (S40 family only).
4	-
5	Cell heater failure (S30, S40 and S50 family only).
6	-
7	-

C.2.2 ST

Set the instrument mode.

Command Format

<STX>{ST}{< kkk>}<SP>{command}<ETC><bcc1><bcc2>

Where:

kkk	Device's Serial ID. This field is optional, but if provided it must be padded with zeros to be 3 characters long. The value must match one of the following: the instrument's Bayern-Hessen ID, 000, or ??? (three question marks).
Command	M, N or K for Measure, Zero or Span mode.
bcc1	First byte of the block check calculation.
bcc2	Second byte of the block check calculation.

Device response

The device does not issue a response to this command.

Appendix D. ModBus Protocol

The Serinus supports a limited Modbus implementation. The only function codes supported are 3 (read holding register) and 16 (write multiple registers). The Serial ID is assigned in the **Main Menu → Communications Menu → Serial Communication Menu**.

D.1 Command Format

<Slave address><Function code><Start register (MSB)><Start register <LSB><Register count (MSB)><Register count (LSB)><Write byte count><Write data><CRC (MSB)><CRC (LSB)>

Where:

Slave address	The instrument Serial ID. If the request is being made via TCP, this field is omitted.
Function code	3 (read) or 16 (write).
Start register	Specifies an Advanced Protocol IEEE index (refer to Table 47 to see what values are available and what index to specify for them). The ModBus index is calculated from the Advanced Protocol index via the following formula: Mobus Index = Advanced Protocol Parameter List number x 2 + 256
Register count	A single read command may request from 2 - 124 registers, which is to say from 1 - 62 values. The first index is specified by Start register; all following indexes are in sequential order. To read values that are not sequential requires using another read command. Note that the number of registers must be even, as each value is returned as a floating point value (4 bytes) and each register is a word (2 bytes). A write command can only write a single IEEE value at a time. Thus for write commands this value must be 2.
Write byte count	This field is only supplied for a write request; it indicates the amount of bytes of data that will follow, and must be set to 4 (since only one value can be written at a time).
Write data	This field is only supplied for a write request. It is the value to be written, expressed in IEEE format. The “Endian” structure can be selected on the Modbus Serial Communications menu. Big Endian means that the MSB byte of the IEEE value is at the right end of the four bytes; Little Endian means it is at the left.
CRC	Calculated by the standard Modbus CRC method. If the request is being made via TCP, this field is omitted.

D.2 Commands

D.2.1 Read Holding Registers

The response to a read request is in the following format:

<Slave address>3<Register count (MSB)><Register count (LSB)><Data><CRC (MSB)><CRC (LSB)>

Where:

Slave address	As general command format.
Register count	As general command format.
Data	4 - 248 bytes of data, representing 1 - 62 floating point numbers in IEEE format. The “Endian” structure can be selected on the Modbus Serial Communications menu. Big Endian means that the MSB byte of the IEEE value is at the right end of the four bytes; Little Endian means it is at the left.
CRC	As general command format.

D.2.2 Write Holding Register

The only supported use for this command is to set the instrument into a calibration state.

Where:

Start register MSB	1
Start register LSB	170
Register count	2
Write Data bytes	The IEEE representation of 0, 1, 2, or 3 0 puts the instrument into Measure mode (0,0,0,0) 1 puts the instrument into Cycle mode (63,128,0,0) 2 puts the instrument into Zero mode (64,0,0,0) 3 puts the instrument into Span mode (64,64,0,0)

The response to a write request is to return the first six bytes of the initiating write request.

D.2.3 Error

An error will be returned in the following format:

<Slave address><Function code><Exception code><CRC (MSB)><CRC (LSB)>

Slave address	As general command format.
Function code	The initiating command’s function code + 128; so either 131 (read) or 144 (write).

Exception code The error code (see table below).

CRC As general command format.

Table 52 – Modbus Error Codes

Value	Error
1	Illegal Function
2	Illegal Data Address
3	Illegal Data Value
4	Slave Device Failure

DORGEAN
Beijing Dorgean Electronic Technology Co.,Ltd

Instrument Expert
Original factory
packaging
www.dorgean.com

Met One Instruments

POWERED BY ACOEM

metone.com

User manual subject to change without notice. Images used are for illustrative purposes only.
All trademarks and registered trademarks are the property of their respective owners.
© 2022 Acoem and all related entities. All rights reserved.